User Manual

& Installation Instructions

S.S. LB-40 thru LB-60

IMPORTANT – READ ALL INSTRUCTIONS BEFORE OPERATING

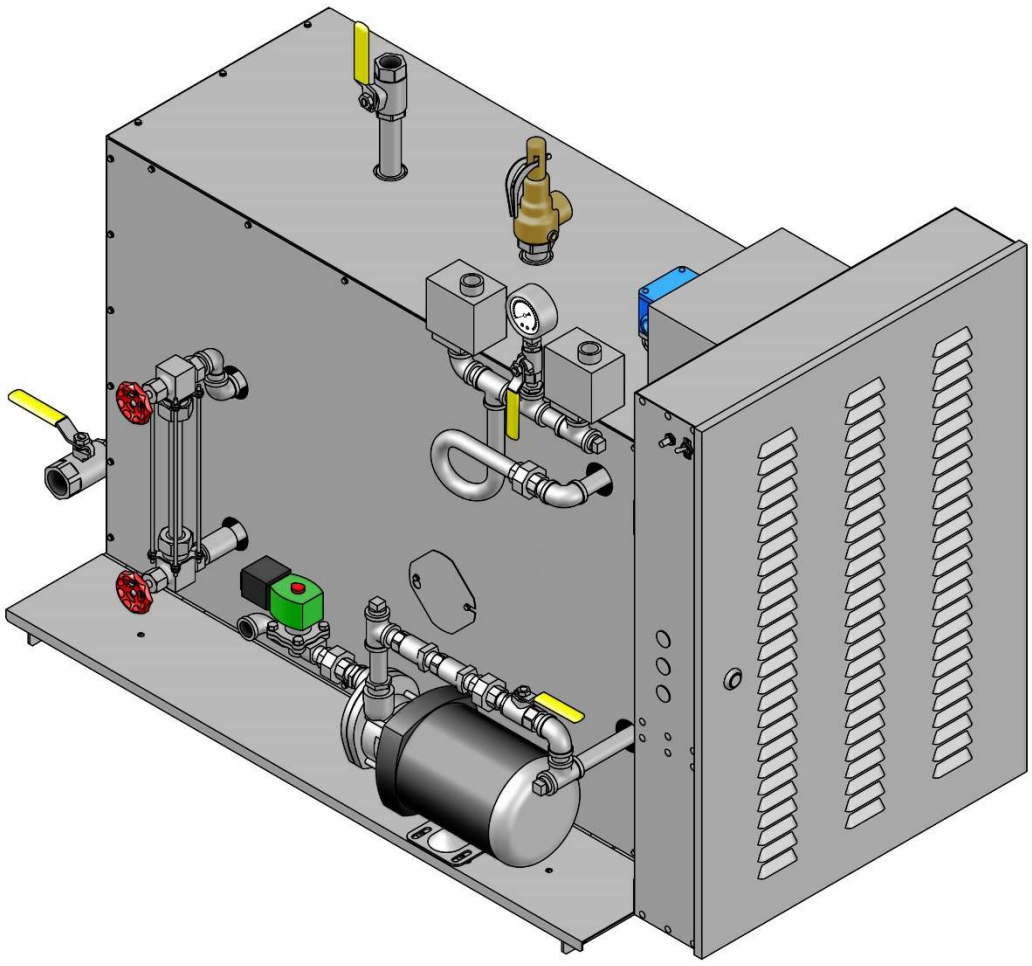

All steam boilers are built in accordance with ASME miniature boiler code.

NOTE: It is the responsibility of the installer to conform to any state or local codes. If further inspection, following modification by installer, is required under state or local codes, that is the responsibility of the local installer

Electro-Steam
ESTABLISHED 1952

www.electrosteam.com

rev. 12102018

WARNING - The following labels have been placed on this boiler for **YOUR SAFETY**. Failure to observe these instructions could lead to **PROPERTY DAMAGE**, **SEVERE INJURY,** or even **DEATH**

CAUTION HOT

CAUTION

THROW OFF MAIN POWER SWITCH BEFORE WORKING ON ELECTRICAL CABINET

A MANUAL WAS SHIPPED WITH THIS BOILER. IT IS IMPORTANT THAT YOU READ, UNDERSTAND, AND OPERATE THIS STEAM GENERATOR IN ACCORDANCE WITH THE OPERATING INSTRUCTIONS CONTAINED IN THE MANUAL. IF FOR ANY REASON YOU DO NOT HAVE A MANUAL, CALL ELECRTO-STEAM AT 800-634-8177

REPLACE GLASS EVERY SIX MONTHS

RETIGHTEN SIGHT GLASS BEFORE USE

CAUTION USE ELECTRICAL SUPPLY CONDUCTORS RATED FOR A MINIMUM OF 90°C

TERMINALS ARE SUITABLE FOR COPPER WIRE ONLY

U.L. 834 PAR. 4416

AMBIENT TEMPERATURE AROUND UNIT NOT TO EXCEED 105° F

rev. 12102018

TABLE OF CONTENTS

1.) INSTALLATION INSTRUCTIONS 4

2.) OPERATION & SEQUENCE OF EVENTS 5

3.) CLEANING & MAINTENANCE 6-15

3.1) MANUAL "BLOW DOWN" 6
3.2) CLEANING WATER LEVEL PROBES 7
3.3) CLEANING OR REPLACING HEATERS 8
3.4) REPLACING GLASS GAUGE & GLASS PACKINGS 9
3.5) CHAMBER CHEMICAL/ACID TREATMENT 10-11
3.6) PRESSURE SWITCH DATA SHEET 12
3.7) SETTING THE PRESSURE SWITCHES 13-15

4.) CALCULATIONS & TABLES 16-17

4.1) ELECTRIC BOILER STANDARD RATINGS 16
4.2) ADJUSTED ELECTRIC BOILER CALCULATIONS 16
4.3) HEATER POWER & VOLTAGE RATINGS 17
4.4) ACTUAL POWER & AMPERAGE CALCULATIONS 17

5.) DRAWINGS & WIRING SCHEMATICS 18-35

5.1) PARTS LEGENDS 18-29
5.1.1) PLUMBING PARTS 18-22
5.1.1.1) LOW PRESSURE WATER INLET ASSEMBLY 18
5.1.1.2) HIGH PRESSURE WATER INLET ASSEMBLY 19
5.1.1.3) SIGHT GLASS ASSEMBLY 20
5.1.1.4) PRESSURE SWITCH ASSEMBLY 21
5.1.1.5) STEAM OUT, DRAIN, & SAFETY ASSEMBLY 22
5.1.2) ELECTRICAL PARTS 23-29
5.1.2.1) ELECTRICAL CABINET ASSEMBLY 23
5.1.2.2) WATER LEVEL PROBES ASSEMBLY 24
5.1.2.3) HEATING ELEMENT ASSEMBLY 25
5.1.2.4) CONTROL BOARD ASSEMBLIES 26-29
5.2) INSTALLATION DATA SHEETS 30-31
5.2.1) S.S. LB 40-60 (L) 30
5.2.2) S.S. LB 40-60 (H) 31
5.3) SCHEMATICS 32-35
5.3.1) 120 VAC CONTROLS - S.S. LB 40-60 (L) 32
5.3.2) 120 VAC CONTROLS - S.S. LB 40-60 (H) 33
5.3.3) TRANSFORMER OPTION 34
5.3.4) 208-600 VAC 3Ø HEATER WIRING - LB 40-60 35

6.) TERMS & CONDITIONS 36

1.) INSTALLATION INSTRUCTIONS

LITTLE BOILER "LB-SERIES"

The Electro-Steam Generator design consists essentially of a high pressure chamber filled with water that is heated by one or more submerged resistance type electric heating elements. Automatic controls are provided to maintain the pre-set operating pressure and water level. Safety features include: automatic low-water cutoff (manual low-water reset optional), dual pressure controls, safety valve, and visible water level gauge. All of our generators are built in accordance with A.S.M.E. Miniature Boiler Code and are individually inspected and stamped by an Authorized National Board Insurance Inspector.

IMPORTANT – READ ALL INSTRUCTIONS BEFORE OPERATING

Important – Set unit perfectly level, and as close as possible to the steam vessel or appliance it will operate. For generator measurements, refer to Installation Data Drawings; for interpretation of numbered or lettered items, refer to Parts Legend Drawings.

NOTE: Ambient temperature around this unit must not exceed **105°F (40°C).**

CONNECTIONS:

Periodically check all plumbing and electrical connections for tightness; this should also be done before initial start-up.

ELECTRICAL:

This generator must be connected to a disconnect switch protected by fuses or circuit breakers with the proper size wire by a licensed electrician in accordance with N.E.C. and your local codes – Voltage, KW, and Phase requirement are marked on the nameplate.

WATER SUPPLY:

Connect D.I. or R.O. purity water line to **Water Inlet (1)**
Purity Range: 1 – 5.5 MEG OHM per CM
Temperature Range: 32 – 140°F (0 – 60°C)
Pressure Range: 20 – 150PSI.
MAX Flow Rate: 2 GAL/MIN

STEAM OUTLET:

Connect **Steam Outlet Valve (12)** to piece of equipment, vessel, room, or area to be operated by the Electro Steam Generator.

SAFETY VALVE & DRAIN:

Separately route the **Safety Valve (15)** & **Drain Valve (13)** to a high temperature drain *NO PVC. Discharging pipe of the **Safety Valve (15)** should never be smaller than the valve outlet and should be rigidly supported, placing no weight on the safety valve itself.

2.) OPERATION & SEQUENCE OF EVENTS

IMPORTANT – READ INSTALLATION INSTRUCTIONS BEFORE OPERATING

1. Turn on water supply from the source to the Generator.

2. **OPEN** all valves on the Generator except for the **Drain Valve (13)**.

3. Place the main disconnect switch in the **ON** position.

4. Place the **Toggle Switch (16)** in the **ON** position.

   - The **Water Solenoid (2)** [and **Pump/Motor (3)**, if high pressure] will engage and the **Boiler Chamber (25)** will begin to fill with water. As the water level rises, it will make contact with the **"D/G" & "A" Probe Rods (22)**, indicating the **Heating Elements (23)** are safely submerged. At this time, the **Contactor(s) (C)** will engage, supplying power to the **Heating Elements (23)**, and causing steam pressure to accumulate.

   - The **Boiler Chamber (25)** will continue to fill with water until 1 second after the water makes contact with the **"C" Probe Rod (22)**, causing the **Water Solenoid (2)** [and **Pump/Motor (3)**, if high pressure] to turn off.

   - If the **Contactor(s) (C)** have not engaged after the **Boiler Chamber (25)** filled with water, the Reset Button on top of the **"Safety" Pressure Control (9)** may be tripped. If an **Optional Manual Low-Water Reset (MLWR) (17)** is installed and operational, it must be pressed at this time to engage the **Contactor(s) (C)**.

   - Steam pressure will continue to rise until it reaches the set operating pressure. This may take 10-25 minutes, depending on the model. At this time, the **"Control" Pressure Control (8)** will cause the **Contactor(s) (C)** to disengage. The pressure will drop approximately 2-8 PSI until the **"Control" Pressure Control (8)** causes the **Contactor(s) (C)** to reengage, causing the pressure to rise again. The **Contactor(s) (C)** will continue to cycle on and off during operation.

5. The Generator is now fully operational and will produce steam until it is turned off.

   - As steam is exhausted, the water level will drop until 1 seconds after it breaks contact with the **"C" Probe Rod (22)**. At this time, the **Water Solenoid (2)** [and **Pump/Motor (3)**, if high pressure] will refill the **Boiler Chamber (25)** with water. The **Boiler Chamber (25)** will continue filling until 1 second after the water makes contact with the **"C" Probe Rod (22)**. The **Water Solenoid (2)** [and **Pump/Motor (3)**, if high pressure] will continue to cycle on and off during operation.

6. To shut off the Generator, place the **Toggle Switch (16)** in **OFF** position. The pressure will drop naturally as the **Boiler Chamber (25)** cools, or the Generator may be drained manually through **Drain Valve (13)**. (See Manual Blow Down 3.1)

WARNING – **HOT WATER** and **STEAM** under **HIGH PRESSURE** can lift drain pipes right off the ground and cause **SERIOUS INJURY**. Make sure drain pipe is **SECURE** and **CANNOT** move. The drain must be directed into a **HIGH TEMPERATURE** drain (**NO PVC**) or outside.

3.) CLEANING & MAINTENANCE

The following cleaning procedures are **HIGHLY RECOMMENDED** in order to keep your Steam Generator in the best operating condition at all times.

3.1) MANUAL "BLOW DOWN"

A Manual "Blow Down" is an easy way to **GREATLY** extend the life of the Steam Generator. Blow Downs should be done **AT LEAST TWICE A MONTH**.

NOTE: The best time to Blow Down your generator is after it has been running for some time, while it is still hot.

1. Place **Toggle Switch (16)** and Main Disconnect Box in **OFF** position.

2. Allow pressure to drop to **10 PSI**.

3. Slowly open the **Drain Valve (13)** (1/4 Turn at a time), allowing **HOT WATER** and **STEAM** to blow out into the drain, cleaning out the generator.

WARNING – **HOT WATER** and **STEAM** under **HIGH PRESSURE** can lift drain pipes right off the ground and cause **SERIOUS INJURY**. Make sure drain pipe is **SECURE** and **CANNOT** move. The drain must be directed into a **HIGH TEMPERATURE** drain (**NO PVC**) or outside.

3.2) CLEANING WATER LEVEL PROBES

CLEANING the **Probe Rods (22)** is by far the **MOST IMPORTANT** maintenance step; almost all steam generator malfunctions are caused by dirty water level probes. The **Probe Rods (22)** should be cleaned **AT LEAST TWICE A YEAR** to keep the generator running properly.

NOTE: The best time to clean the **Probe Rods (22)** is before the generator is turned on, while it is still cool.

WARNING – There **MUST** be **NO PRESSURE** in the **Boiler Chamber (25)**. If the probes must be removed while the generator is **HOT**, perform a **(3.1) Blow-Down** and keep the **Steam Outlet Valve (12)** and **Drain Valve (13) OPEN** to assure that the **Boiler Chamber (25)** remains depressurized. **DO NOT** touch the probes with your bare hands, and be cautious of escaping steam from the **Probe Holder (20)** while the probes are removed.

1. Place **Toggle Switch (16)** and Main Disconnect Box in **OFF** position.
2. Make sure generator is cool and the **Pressure Gauge (11)** reads **0 PSI**.
3. Remove the cover of the **Probe Holder (20)**, exposing the **Probe Plugs (21)**.
4. Use a 5/16” Nut Wrench/Socket to remove the high temperature colored wires from the **Probe Plugs (21)**.
5. Use a 13/16” Deep Socket to remove the **Probe Plugs (21)** from **Probe Holder (20)**.
6. Clean the **Probe Rods (22)** to remove rust and scaling.

   NOTE: To clean the probes you may use emery cloth, wire wheel, wire brush, steel wool, or Scotch-Brite. (Wire wheel works the best) You may also want to try some sort of chemical like CLR remover or LIME-A-WAY.

7. Reinstall the **Probe Plugs (21)**, assuring each **Probe Rod’s (22)** length is assigned to its proper letter **(See Table 1)**

   NOTE: Letters are engraved into the **Probe Holder (20)** next to each hole.

8. Reconnect the high temperature colored wires to the **Probe Plugs (21)**, assuring each color is also assigned to its proper letter. **(See Table 1)**

   NOTE: DO NOT make wires too tight. Tighten just enough to make contact. Over tightening can cause **Probe Plugs (21)** to pull apart over time.

9. Reinstall the cover of the **Probe Holder Assembly (20)**

Table 1 - Water Level Probe Specifications

Letter Assignment on Chamber	A	C	D/G
Water Level Probe Length	15”	13”	15”
Wire Color Assignment	RED	BLK	GRN

3.3) CLEANING OR REPLACING HEATERS

The **Heating Elements (23)** are located inside the control box below the insulation barrier, bolted into the **Boiler Chamber (25)**. If **(3.5) Chamber Chemical/Acid Treatments** are not regularly done, the **Heating Elements (23)** must be taken out at least **ONCE A YEAR**, cleaned and reinstalled using a new **Heater Gaskets (24)**.

NOTE: The best time to clean or replace a **Heating Element (23)** is several hours after a **(3.1) Blow-Down**, while the **Boiler Chamber (25)** is cool and completely drained.

WARNING – There **MUST** be **NO WATER** or **PRESSURE** in the **Boiler Chamber (25)**. If the **Heating Elements (23)** must be removed while the generator is **HOT**, perform a **(3.1) Blow-Down** and keep the **Steam Outlet Valve (12)** and **Drain Valve (13) OPEN** to assure that the **Boiler Chamber (25)** remains depressurized. **DO NOT** touch any parts with your bare hands, and be cautious of escaping steam from the heater flanges while the **Heating Elements (23)** are removed.

1. Place the **Toggle Switch (16)** and Main Disconnect Box in **OFF** position.

2. Make sure the generator is cool and the **Pressure Gauge (11)** reads **0 PSI**.

3. Remove the heater wires from the **Heating Elements (23)**, using a 3/8” Nut Wrench.

4. Unbolt and remove the **Heating Elements (23)** using a 1-1/16” Socket.

NOTE: The **Heating Elements (23)** may be difficult to get out; some sort of pry bar may be required to get them loose.

5. Dispose of or clean the **Heating Elements (23)** with a wire brush. If replacing, dispose of old **Heating Elements (23)**.

6. Reinstall the **Heating Elements (23)** with a new **Heater Gaskets (24)**.

7. Re-attach the heater wires assuring proper wiring. *Refer to Heater Wiring Schematics attached*

NOTE: If replacing a **Heating Element (23)** because of a heater failure, also clean the **Probe Rods (22)** and break away any debris/scale in the **Boiler Chamber (25)** that may make contact with the new **Heating Elements (23)**, or there may be another heater failure almost immediately.

3.4) REPLACING GLASS GAUGE & GLASS PACKINGS

The **Sight Glass (5)** gives the operator the ability to monitor the water level inside the **Boiler Chamber (25)**, which can aid in troubleshooting Boiler malfunctions. The **Sight Glass (5)** and **Glass Packings (6)** must be replaced **EVERY SIX MONTHS**.

NOTE: The best time to replace the **Sight Glass (5)** and **Glass Packings (6)** is several hours after performing a **(3.1) Blow-Down**, while the **Boiler Chamber (25)** is cool and completely drained.

WARNING – There **MUST** be **NO WATER** or **PRESSURE** in the **Boiler Chamber (25)**. If the **Sight Glass (5)** must be removed while the generator is **HOT**, perform a **(3.1) Blow-Down** and keep the **Steam Outlet Valve (12)** and **Drain Valve (13) OPEN** to assure that the **Boiler Chamber (25)** remains depressurized. **DO NOT** touch any parts with your bare hands, and be cautious of escaping steam from the **Gauge Fittings (7)** while the **Sight Glass (5)** is removed.

INSTALLATION:

Only properly trained personnel should install and maintain water gauge glass and connections. Wear safety gloves and glasses during installation. Before installing, make sure all parts are free of chips and debris.

1. Uninstall Guard Rods with a 3/8” Crescent or Adjustable Wrench.
2. Remove the Glass Packing Nuts from both Gauge Fittings with a 1-1/2” Crescent or Adjustable Wrench.
3. Remove and dispose of old Glass Gauge and Glass Packings (You may need to use a pipe wrench to rotate one or both of the Gauge Fittings for the Glass Gauge to clear).
4. Slip a new Glass Packing on the new Glass Gauge about an inch from the bottom.
5. Now slip the following items on the top of Glass Gauge in the following order:
   - Packing Gland (facing down)
   - Glass Packing Nut (facing down)
   - Glass Packing Nut (facing up)
   - Packing Gland (facing up)
   - Glass Packing (inch down from top)
   - Packing Washer
6. Gently insert Glass Gauge into Gauge Fittings. If needed, rotate Gauge Fittings until vertically aligned after Glass Gauge is in place.
7. Carefully raise Glass Gauge about 1/16-inch from bottom and slide lower Glass Packings down until it makes contact with the Bottom Gauge Fitting (DO NOT allow Glass Gauge to remain in contact with any metal).
8. Carefully slide upper Glass Packings up as far as possible.
9. Hand tighten both Glass Packing Nuts, then tighten 1/2 turn more by wrench. Tighten only enough to prevent leakage. Do not over tighten. If any leakage should occur, tighten slightly, a quarter turn at a time, checking for leakage after each turn.
10. Reinstall Guard Rods.

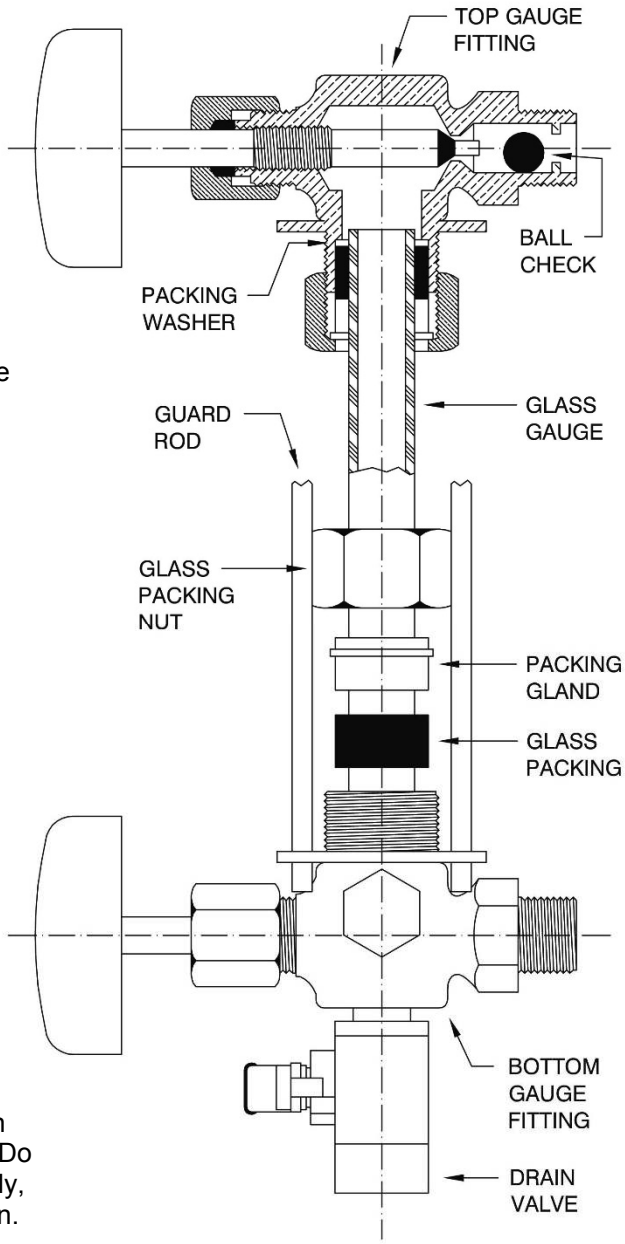

3.5) CHAMBER CHEMICAL/ACID TREATMENT

All Electric Steam Generators should be cleaned yearly.

Chamber Treatment Instructions:

1. Turn on the generator, allow the pressure to climb to **10 PSI** on the **Pressure Gauge (11)**, and then shut off.

2. Slowly open the **Drain Valve (13)** (1/4 Turn at a time), allowing **HOT WATER** and **STEAM** to blow out into the drain, cleaning out the generator.

WARNING – **HOT WATER** and **STEAM** under **HIGH PRESSURE** can lift drain pipes right off the ground and cause **SERIOUS INJURY**. Make sure drain pipe is **SECURE** and **CANNOT** move. The drain must be directed into a **HIGH TEMPERATURE** drain (**NO PVC**) or outside.

3. With the **Steam Outlet Valve (12)** and **Drain Valve (13)** kept **OPEN**, remove the **Safety Valve (15)**.

WARNING – There **MUST** be **NO HOT WATER** or **PRESSURE** in the **Boiler Chamber (25)** when removing the **Safety Valve (15)**; keep the **Steam Outlet Valve (12)** and **Drain Valve (13) OPEN** to assure that the **Boiler Chamber (25)** remains depressurized. **DO NOT** touch any parts with your bare hands, and be cautious of escaping steam from the **Boiler Chamber (25)** while the **Safety Valve (15)** is removed.

4. Close the **Drain Valve (13)**; turn on the generator until the **Sight Glass (5)** is 1/2 full, and then shut off.

5. Insert a funnel into the coupling where the **Safety Valve (15)** used to be.

NOTE: Keep the **Steam Outlet Valve (12) OPEN** for venting purposes.

6. Pour **1 Gallon** of acid solution into the funnel very slowly, being careful of fumes and venting while pouring.

NOTE: Sulfamic Acid Solution is commonly used for Stainless Steel Generators. However, Electro-Steam Generators **DOES NOT** make recommendations for titration levels nor which chemical solution will best fit your application. Acid solution and recommendations can be obtained from any industrial chemical dealer. **FOR FOOD APPLICATIONS**, use FDA approved chemicals as specified by the chemical supplier.

7. Remove the funnel and reinstall the **Safety Valve (15)**

8. Close the **Steam Outlet Valve (12)** and let the acid solution stand for **1 HOUR**.

9. Turn on the generator, allowing the pressure to climb to **5 PSI** on **Pressure Gauge (11)**, and then shut off.

3.5) CHAMBER CHEMICAL/ACID TREATMENT (Continued)

10. Wait **OVER NIGHT** (Approximately **8 HOURS**) for the pressure to drop to **0 PSI** on **Pressure Gauge (11)** as the **Boiler Chamber (25)** cools. **DO NOT** open the **Steam Outlet Valve (12)** until pressure is down.

11. **OPEN** the **Steam Outlet Valve (12)**, and remove the **Safety Valve (15)**.

12. Reinsert the funnel, and fill the generator completely to the top with clean water; let it stand for an additional **1/2 HOUR**.

NOTE: Turning on the generator will not completely fill it to the top. Filling must be done manually through the safety valve coupling.

13. Open the **Drain Valve (13)** to completely drain the generator.

14. Close the **Drain Valve (13)**; refill generator completely to the top with clean water and open the **Drain Valve (13)** to again flush out generator completely.

15. Reinstall the **Safety Valve (15)** and close the **Drain Valve (13)**.

16. Turn on the generator, allowing pressure to climb to **10 PSI** on **Pressure Gauge (11)**, and then shut off.

17. Slowly open the **Drain Valve (13)** (1/4 Turn at a time), allowing **HOT WATER** and **STEAM** to blow out into the drain, cleaning out the generator.

WARNING – **HOT WATER** and **STEAM** under **HIGH PRESSURE** can lift drain pipes right off the ground and cause **SERIOUS INJURY**. Make sure drain pipe is **SECURE** and **CANNOT** move. The drain must be directed into a **HIGH TEMPERATURE** drain (**NO PVC**) or outside.

18. The generator is now ready for normal use and operation.

3.6) PRESSURE SWITCH DATA SHEET

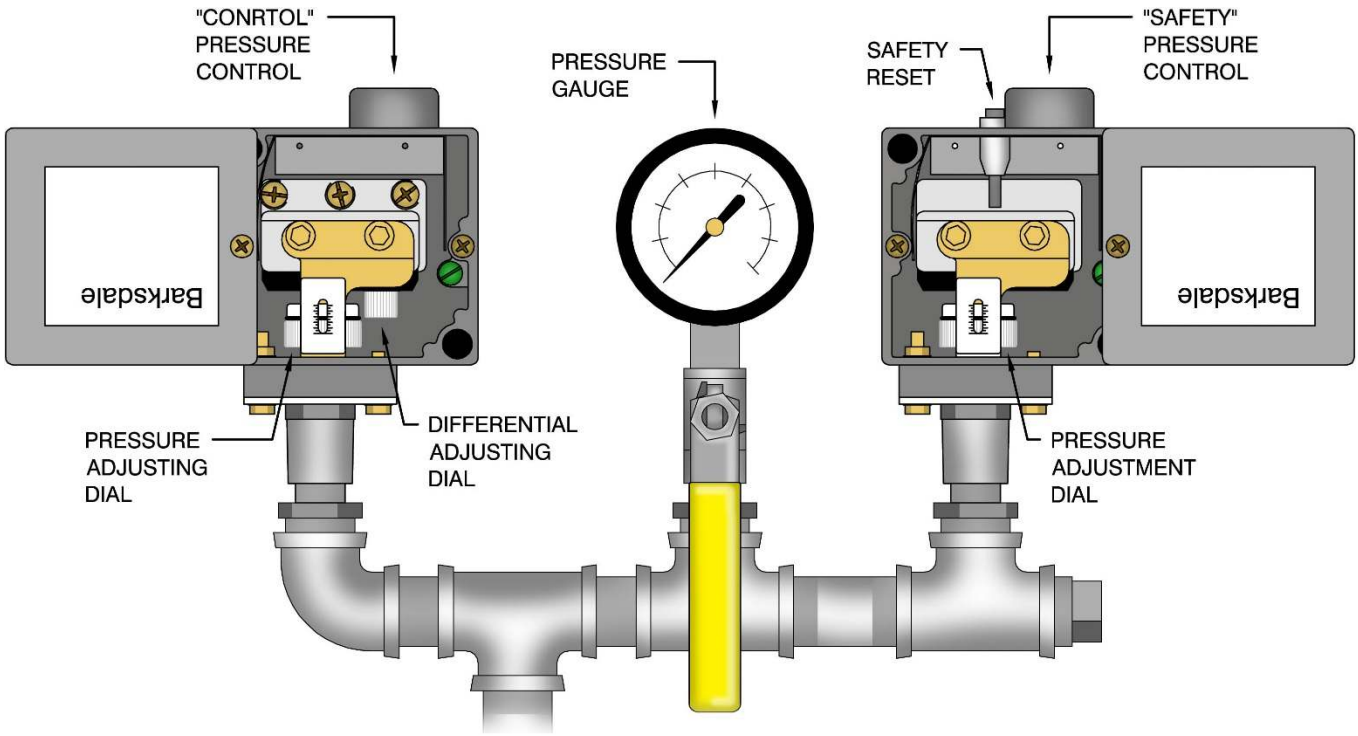

DEFINITIONS:

"CONTROL" PRESSURE SWITCH (8) – This pressure switch should be the only one controlling the operating pressure of the generator.

"SAFETY" PRESSURE SWITCH (9) – This pressure switch is set higher than the **"Control" Pressure Switch (8)**; if the operating pressure is ever exceeded, the **"Safety" Pressure Switch (9)** will turn the **Heating Elements (23)** off and prevent them from turning back on until the **Safety Reset** is manually pressed.

SAFETY RESET – This must be manually pressed if the **"Safety" Pressure Switch (9)** turns the heaters off. This alerts the operator that the operating pressure has been exceeded. If it has tripped, the **"Control" Pressure Switch (8)** may have failed.

PRESSURE ADJUSTING DIAL – These dials adjust the pressure setting at which each pressure switch will turn the **Heating Elements (23) ON** and/or **OFF**.

DIFFERENTIAL ADJUSTING DIAL – This dial, if present, is only on some **"Control" Pressure Switches (8)**. The pressure span between **ON** and **OFF** on the **"Control" Pressure Switch (8)** can be adjusted by this dial. This dial should never have to be adjusted, unless desired by the operator.

PRESSURE GAUGE (11) – This tells the operator what pressure is in the **Boiler Chamber (25)**. The **Pressure Switches (8,9)** are set to this gauge.

3.7) SETTING THE PRESSURE SWITCHES

WARNING – **DO NOT ALTER** the original **FACTORY PRESSURE SETTINGS** of the **Pressure Switches (8,9)** without contacting Electro-Steam Generator Corp. Every boiler is designed to produce a specific flow rate of steam at a set pressure. Altering the factory pressure settings will affect the performance of the machine, which may Hinder your process, **CAUSE DAMAGE** and potentially **VOID ANY WARRANTIES**.

WARNING – Contact Electro-Steam Generator Corp, **BEFORE** attempting to adjust the **Pressure Switches (8,9)**. The Pressure switches should only be adjusted if one has been replaced or if the set points have drifted from their original factory set points.

WARNING – The **Pressure Switches (8,9)** must be set while all circuits are live. **TO AVOID ELECTRICAL SHOCK, DO NOT TOUCH** the wires or the terminals in which they connect while setting the **Pressure Switches (8,9)**.

(Table 2) STANDARD FACTORY PRESSURE SETTINGS

	Control Pressure Switch (8) *"Operating Pressure"*	**Safety Pressure Switch (9)** *"High Pressure Reset"*	**Safety Relief Valve (15)** *"Pop-OFF Pressure"*
Low Pressure (0-15 psi)	11 psi	13.5 psi	15 psi
High Pressure (0-100 psi)	80 psi	85 psi	100 psi

NOTE: *The Operating Pressure must never exceed 80% of the Safety Relief Valve's Pressure Rating. Pressures higher than 80% will cause the Safety Valve to leak.*

NOTES:

- Setting the **Pressure Switches (8,9)** greatly relies on the ability to tell whether the **Contactor(s) (C)** have turned **ON** or **OFF**. The **Contactor(s) (C)**, located inside the Control Box, will make a loud click when they turn **ON** or **OFF**. Familiarize yourself with this sound.
- The **"Safety" Pressure Switch (9)** must be set before the **"Control" Pressure Switch (8)**.
- In order to set the **"Safety" Pressure Switch (9)**, the **"Control" Pressure Switch (8)** must **TEMPORARILY** be set higher than the **"Safety" Pressure Switch (9)** so that the pressure will reach the required safety pressure setting.
- After the **"Safety" Pressure Switch (9)** is set, then and only then can the **"Control" Pressure Switch (8)** be set to its correct lower pressure setting.
- To **INCREASE** the pressure setting, when looking down on the **Pressure Switches (8,9)**, using your two index fingers, turn the **PRESSURE ADJUSTMENT DIAL CLOCKWISE**, causing the **BLACK INDICATOR LINE** to move **DOWN** the scale.
- To **DECREASE** the pressure setting, turn the dial **COUNTER CLOCKWISE**, causing the indicator line to move **UP** the scale.

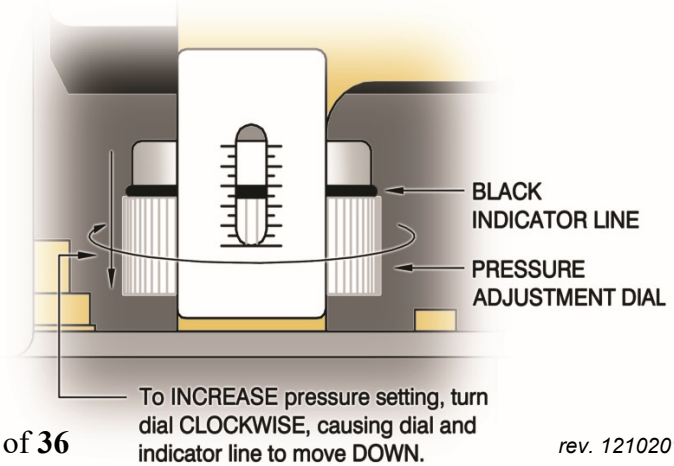

3.7) SETTING THE PRESSURE SWITCHES (Continued)

SETTING INSTRUCTIONS:

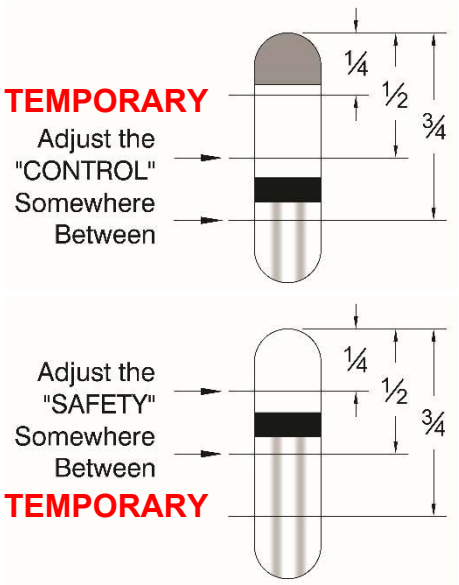

1. Remove the covers of the **Pressure Switches (8,9)**, as shown on the previous page.

2. **TEMPORARILY** adjust the **PRESSURE ADJUSTMENT DIAL** on the **"Control" Pressure Switch (8)** so that the **BLACK INDICATOR LINE** is somewhere between ½ and ¾ of the way down from the top.

3. **TEMPORARILY** adjust the **PRESSURE ADJUSTMENT DIAL** on the **"Safety" Pressure Switch (9)** so that the **BLACK INDICATOR LINE** is somewhere between ¼ and ½ of the way down from the top.

WARNING – Verify the **Safety Valve (15)** pressure rating on the valve itself before you begin. Never let the pressure reach this rating; if at any point the pressure reading on the **Pressure Gauge (11)** passes the desired **"Safety" Pressure Switch (9)** setting according to **Table 2,** shut down the generator, **OPEN** the **Steam Outlet Valve (12)**, **DECREASE** the pressure setting on the **"Safety" Pressure Switch (9)**, and restart at **Step #4.**

4. Open the **Steam Outlet Valve (12)** and turn on the generator.

5. Close the **Steam Outlet Valve (12)** after the **Boiler Chamber (25)** stops filling with water.

   - The pressure should begin to rise on the **Pressure Gauge (11)**. If **Contactor(s) (C)** did not click on, even after the **Boiler Chamber (25)** has stopped filling with water, you may need to press **SAFETY RESET**, located on the **"Safety" Pressure Switch (9)**.

6. Continue watching the **Pressure Gauge (11)** until you hear the **Contactor(s) (C)** click off. (This may take up to 20 minutes.)

WARNING – Never let the pressure reach the rating of the **Safety Valve (15)**; if at any point the pressure reading on the **Pressure Gauge (11)** passes the desired **"Safety" Pressure Switch (9)** setting according to **Table 2,** shut down the generator, **OPEN** the **Steam Outlet Valve (12)**, **DECREASE** the pressure setting on the **"Safety" Pressure Switch (9)**, and restart at **Step #4.**

7. With the **Contactor(s) (C)** clicked off, pressing the **SAFETY RESET** on top of the **"Safety" Pressure Switch (9)** should cause the **Contactor(s) (C)** to click on and off again.

NOTE: This is a way to test if the **"Safety" Pressure Switch (9)** is controlling the pressure.

8. If the **SAFETY RESET** did not cause the **Contactor(s) (C)** to click on and off again, **INCREASE** the setting on the **"Control" Pressure Switch (8)** until the **Contactor(s) (C)** click back on and go back to **Step #6.**

3.7) SETTING THE PRESSURE SWITCHES (Continued)

9. Open the **Steam Outlet Valve (12)** to exhaust some pressure.

10. Continue pressing the **SAFETY RESET** until the **Contactor(s) (C)** click on and remain on.

NOTE: The pressure should eventually begin to rise. If it doesn't, throttle the **Steam Outlet Valve (12)** somewhere between closed and open until it **RISES SLOWLY**.

11. Take note of what pressure was on the **Pressure Gauge (11)** when the **Contactor(s) (C)** clicked **OFF**.

12. If the pressure stopped **BELOW** the desired **"Safety" Pressure Switch (9)** setting, according to **Table 2**, then **INCREASE** the pressure setting on the **"Safety" Pressure Switch (9)**. If the pressure stopped **ABOVE**, then **DECREASE** the pressure setting.

13. Continue to watch the pressure go up and down, while adjusting the **"Safety" Pressure Switch (9)** and pressing the **SAFETY RESET**, until the pressure stops at the desired **"Safety" Pressure Switch (9)** setting according to **Table 2**.

14. At this point the **"Safety" Pressure Switch (9)** should be set and the **"Control" Pressure Switch (8)** should be set somewhere above.

15. Let the pressure drop below the desired **"Control" Pressure Switch (8)** setting, according to **Table 2**, and then press the **SAFETY RESET**.

16. As soon as the **Contactor(s) (C)** click on, **DECREASE** the pressure setting on the **"Control" Pressure Switch (8)** until the **Contactor(s) (C)** click off.

17. Repeat **Step #16** until you no longer need to press the **SAFETY RESET** for the **Contactor(s) (C)** to click on.

18. Continue watching the pressure go up and down, while adjusting the **"Control" Pressure Switch (8)**, until the pressure stops at the desired **"Control" Pressure Switch (8)** setting according to **Table 2.**

19. The **Pressure Switches (8,9)** are now set.

NOTE: If at any time the **SAFETY RESET** needs to be pressed after the **Pressure Switches (8,9)** are set, either one of the switches went bad, the **"Safety" Pressure Switch (9)** is set too low, or the **"Control" Pressure Switch (8)** is set too high.

4.) CALCULATIONS AND DATA SHEETS

4.1) ELECTRIC BOILER STANDARD RATINGS

The following ratings are based on 100% efficiency and are used for sizing purposes only. For more accurate ratings based on water feed temperature, see Section 4.2.

KW	BHP	Full Tank Capacity	Usable Tank Capacity	MAX Motor Flow Rate	Average Water Consumption		Average Steam Production		BTU/HR
		(Gallons)	(Gallons)	GAL/MIN	GAL/HR	L/HR	LB/HR	Kg/HR	
40	4	15	11	2	16.54	62.6	138	62.6	133900
50	5	15	11	2	20.67	78.24	172.5	78.24	167375
60	6	15	11	2	24.8	93.89	207	93.89	200850

4.2) ADJUSTED ELECTRIC BOILER CALCULATIONS

The following ratings are adjusted output ratings based on water feed temperature. Do not use these ratings for sizing parts (ex. Safety Valves, Steam Traps, Water supplies, Pipes, etc.): Section 4.1 should be used for sizing, since it shows the generator's MAX potential under perfect circumstances.

KW	Water Feed Temperature		Average Water Consumption		Average Steam Production		Actual BTU/HR
	°F	°C	GAL/HR	L/HR	LB/HR	Kg/HR	
40	60	15.6	12.4	46.95	103.5	46.95	100425
	100	37.8	13.23	50.08	110.4	50.08	107120
	140	60	14.88	56.34	124.2	56.34	120510
50	60	15.6	15.5	58.68	129.38	58.68	125531.3
	100	37.8	16.54	62.6	138	62.6	133900
	140	60	18.6	70.42	155.25	70.42	150637.5
60	60	15.6	18.6	70.42	155.25	70.42	150637.5
	100	37.8	19.84	75.11	165.6	75.11	160680
	140	60	22.32	84.5	186.3	84.5	180765

4.3) HEATER POWER & VOLTAGE RATINGS

LB 40-60 Models use 2 Heaters to meet the required **POWER (KW)** from the customer's specified **INPUT VOLTAGE**. Each heater comes in 3 different **POWER RATINGS (KW)** and 4 different **VOLTAGE RATINGS**.

HEATER RATINGS				
KW	AVAILABLE VOLTAGES			
20	208	240	480	600
25	208	230	480	600
30	208	230	480	600

POWER RATINGS per MODEL			
MODEL	HEATER KW RATING	QTY.	TOTAL KW RATING
LB-40	20	2	40
LB-50	25	2	50
LB-60	30	2	60

4.4) ACTUAL POWER & AMPERAGE CALCULATIONS

The following Actual Power and Amperage Calculations are based off of the Supply Voltage verses each Model's Power & Heater Voltage Rating.

Actual Power & Amperage Calculation per Model & Input Voltage					
MODEL	Supply Voltage	Actual KW	Phase	Amperage	Heater Voltage Rating
LB 40	200-220 VAC	37 - 44.7	3Ø	106.8 - 117.4	208 VAC (Delta Config.)
	220-240 VAC	36.6 - 43.6	3Ø	96.0 - 104.8	230 VAC (Delta Config.)
	360-380 VAC	39.9 - 44.5	3Ø	64.1 - 67.6	360.3 VAC (208 VAC Star Config.)
	380-415 VAC	36.4 - 43.4	3Ø	55.3 - 60.4	398.4 VAC (230 VAC Star Config.)
	440-480 VAC	33.6 - 40	3Ø	44.1 - 48.1	480 VAC (Delta Config.)
	550-660 VAC	33.6 - 40	3Ø	35.3 - 38.5	600 VAC (Delta Config.)
LB 50	200-220 VAC	46.2 - 55.9	3Ø	133.4 - 146.8	208 VAC (Delta Configuration)
	220-240 VAC	45.7 - 54.4	3Ø	120.1 - 131	230 VAC (Delta Configuration)
	360-380 VAC	49.9 - 55.6	3Ø	80.1 - 84.5	360.3 VAC (208 VAC Star Config.)
	380-415 VAC	45.5 - 54.3	3Ø	69.1 - 75.5	398.4 VAC (230 VAC Star Config.)
	440-480 VAC	42 - 50	3Ø	55.1 - 60.1	480 VAC (Delta Configuration)
	550-660 VAC	42 - 50	3Ø	44.1 - 48.1	600 VAC (Delta Configuration)
LB 60	200-220 VAC	55.5 - 67.1	3Ø	160.1 - 176.2	208 VAC (Delta Configuration)
	220-240 VAC	54.9 - 65.3	3Ø	144.1 - 157.2	230 VAC (Delta Configuration)
	360-380 VAC	59.9 - 66.8	3Ø	96.1 - 101.4	360.3 VAC (208 VAC Star Config.)
	380-415 VAC	54.6 - 65.1	3Ø	82.9 - 90.6	398.4 VAC (230 VAC Star Config.)
	440-480 VAC	50.4 - 60	3Ø	66.2 - 72.2	480 VAC (Delta Configuration)
	550-660 VAC	50.4 - 60	3Ø	52.9 - 57.7	600 VAC (Delta Configuration)

	PART #	Description	QTY.
1	0022021	1/2" S.S. STREET ELBOW	1
2	0022149	1/2" S.S. WATER SOLENOID	1
4	0022043	1/2" S.S. CHECK VALVE	2
30	0022025	1/2" X 1-1/2" S.S. NIPPLE - SCH 40	3
31	0022023	1/2" S.S. UNION - SCH 40	1
32	0022026	1/2" CLOSE S.S. NIPPLE - SCH 40	2
33	0022116C	1/2" S.S. BALL VALVE	1
34	0022018	1/2" S.S. TEE - SCH 40	1
35	0022024	1/2" S.S. PLUG - SCH 40	1
36	0022139	1/2" X 5" S.S. NIPPLE - SCH 40	1

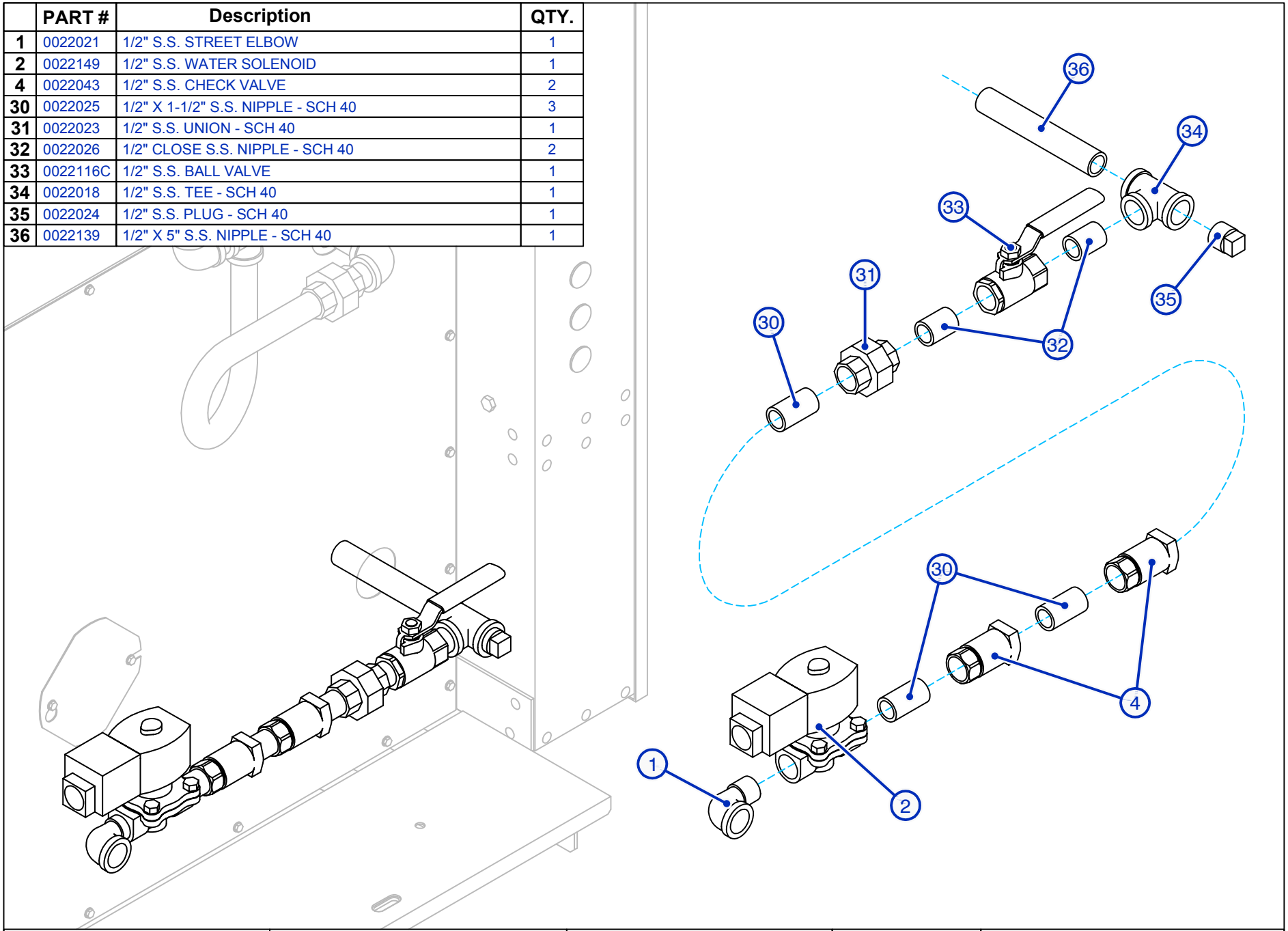

THIS DRAWING IS LOANED BY THE ELECTRO-STEAM GENERATOR CORPORATION TO THE CUSTOMER OR USER AS A GENERAL DESCRIPTION OF THE EQUIPMENT AND IS TO BE USED FOR THE PROPER INSTALLATION AND OPERATION OF THIS EQUIPMENT. THIS DRAWING MAY NOT BE COPIED IN WHOLE OR IN PART NOR CAN IT BE USED FOR THE MANUFACTURE OF ANY EQUIPMENT WITHOUT THE EXPRESS WRITTEN PERMISSION OF THE ELLECTRO-STEAM GENERATOR CORPORATION.

THIS DRAWING CONTAINS PROPRIETARY AND CONFIDENTIAL INFORMATION BELONGING TO THE ELECTRO-STEAM GENERATOR CORPORATION. THIS DRAWING MAY NOT BE REPRODUCED OR COPIED IN WHOLE OR IN PART, NOR CAN THE INFORMATION CONTAINED BE USED FOR ANY PURPOSE WITHOUT THE EXPRESS WRITTEN PERMISSION OF THE ELECTRO-STEAM GENERATOR CORPORATION. THIS DRAWING IS THE PROPERTY OF THE ELECTRO-STEAM GENERATOR CORPORATION AND MUST BE RETURNED UPON REQUEST.

DWG. TITLE: S.S. LB 40-60 LOW PRESSURE WATER INLET PLUMB. ASSY.

CUSTOMER: -

MODEL UNIT: S.S. LB 40-60

ENGINEER:	B.BOYD	09-17-15
DRAWN BY:	C.FERRARA	09-17-15
APPROVED:	B.BOYD	09-17-15

ELECTRO-STEAM GENERATOR CORP.
50 INDEL AVENUE, RANCOCAS, NJ. 08073

DWG NO: -

REV: A

SCALE: N/A

SHEET: 1 OF 5

	PART #	Description	QTY.
1	0022021	1/2" S.S. STREET ELBOW	1
2	0022149	1/2" S.S. WATER SOLENOID	1
3	0022582	3/4 HP S.S. PUMP & MOTOR	1
4	0022043	1/2" S.S. CHECK VALVE	2
31	0022023	1/2" S.S. UNION - SCH 40	2
32	0022026	1/2" CLOSE S.S. NIPPLE - SCH 40	8
33	0022116C	1/2" S.S. BALL VALVE	1
34	0022018	1/2" S.S. TEE - SCH 40	2
35	0022024	1/2" S.S. PLUG - SCH 40	2
37	0022001	3/4" X 1/2" S.S. HEX REDUCER BUSHING	2
38	0022029	1/2" X 3" S.S. NIPPLE - SCH 40	1
39	0022022	1/2" S.S. ELBOW - SCH 40	1
40	0022031	1/2" X 6" S.S. NIPPLE - SCH 40	1

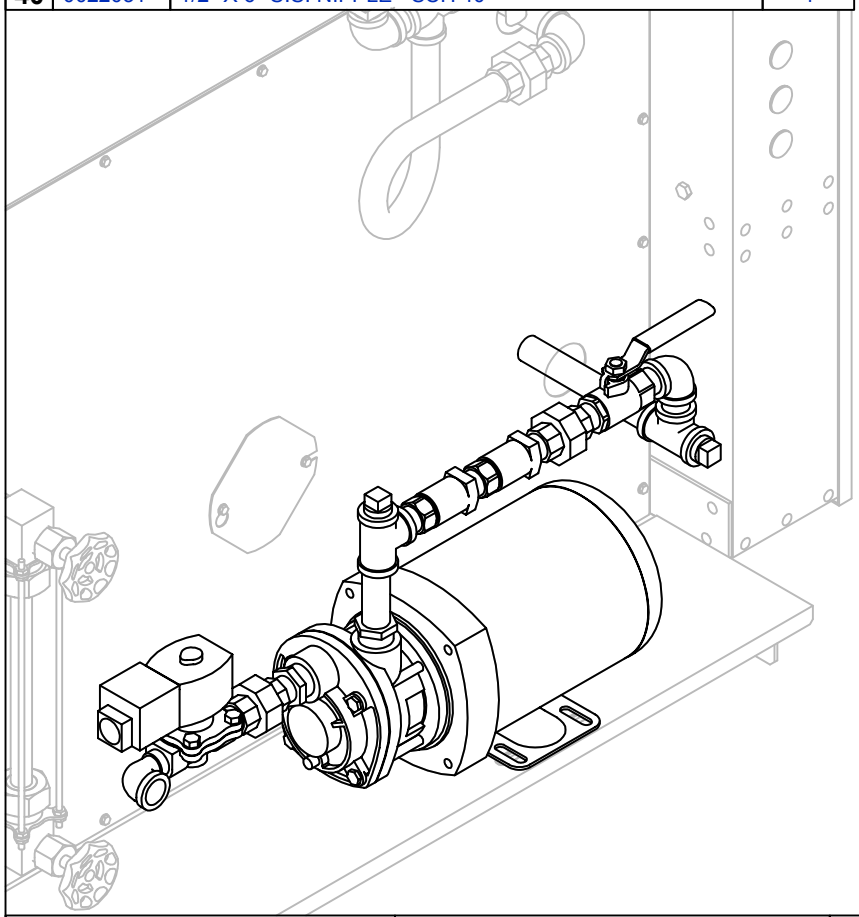

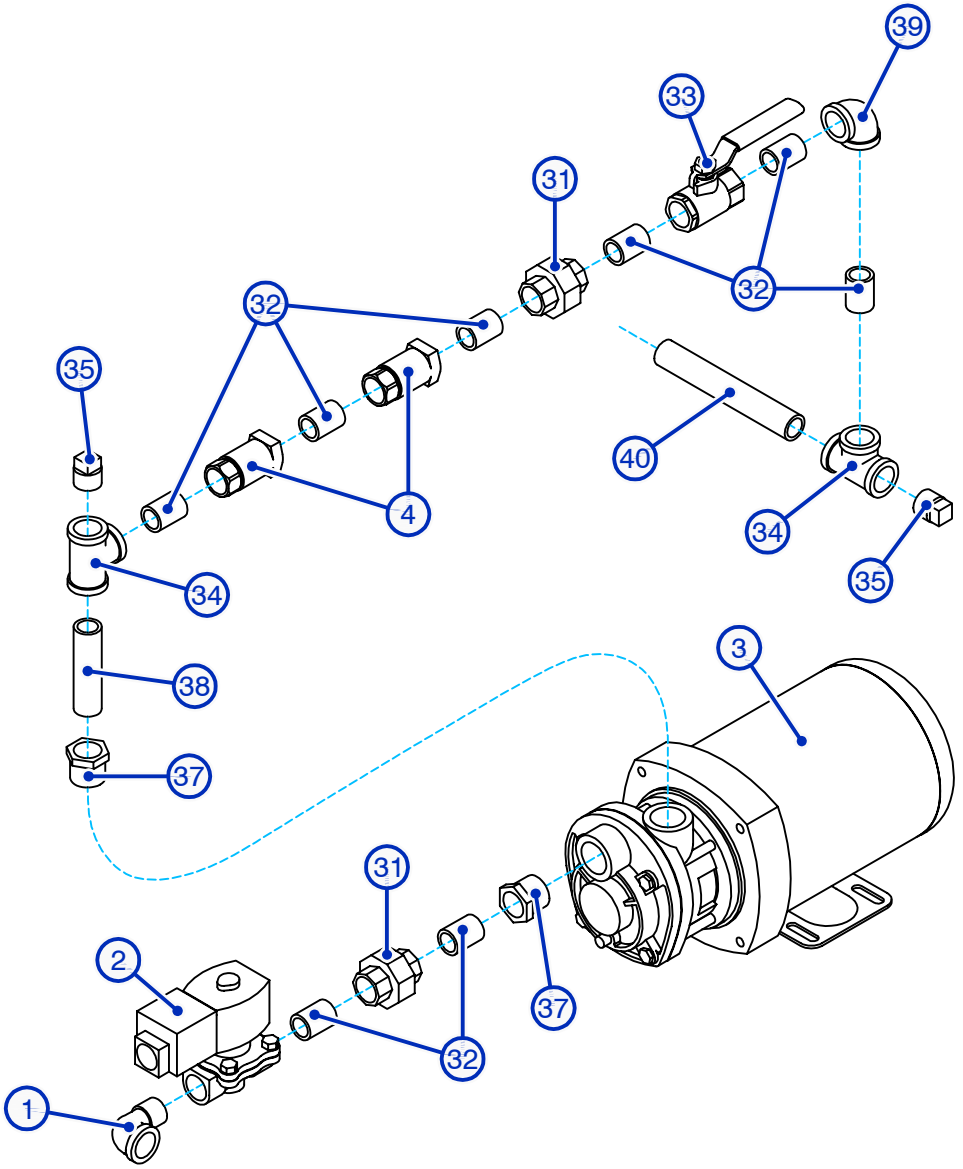

THIS DRAWING IS LOANED BY THE ELECTRO-STEAM GENERATOR CORPORATION TO THE CUSTOMER OR USER AS A GENERAL DESCRIPTION OF THE EQUIPMENT AND IS TO BE USED FOR THE PROPER INSTALLATION AND OPERATION OF THIS EQUIPMENT. THIS DRAWING MAY NOT BE COPIED IN WHOLE OR IN PART NOR CAN IT BE USED FOR THE MANUFACTURE OF ANY EQUIPMENT WITHOUT THE EXPRESS WRITTEN PERMISSION OF THE ELLECTRO-STEAM GENERATOR CORPORATION.

THIS DRAWING CONTAINS PROPRIETARY AND CONFIDENTIAL INFORMATION BELONGING TO THE ELECTRO-STEAM GENERATOR CORPORATION. THIS DRAWING MAY NOT BE REPRODUCED OR COPIED IN WHOLE OR IN PART, NOR CAN THE INFORMATION CONTAINED BE USED FOR ANY PURPOSE WITHOUT THE EXPRESS WRITTEN PERMISSION OF THE ELECTRO-STEAM GENERATOR CORPORATION. THIS DRAWING IS THE PROPERTY OF THE ELECTRO-STEAM GENERATOR CORPORATION AND MUST BE RETURNED UPON REQUEST.

DWG. TITLE: S.S. LB 40-60 HIGH PRESSURE WATER INLET PLUMB. ASSY.

CUSTOMER: -

MODEL UNIT: S.S. LB 40-60		
ENGINEER:	B.BOYD	09-17-15
DRAWN BY:	C.FERRARA	09-17-15
APPROVED:	B.BOYD	09-17-15

ELECTRO-STEAM GENERATOR CORP.
50 INDEL AVENUE, RANCOCAS, NJ. 08073

DWG NO: -

REV: A

SCALE: N/A

SHEET: 2 OF 5

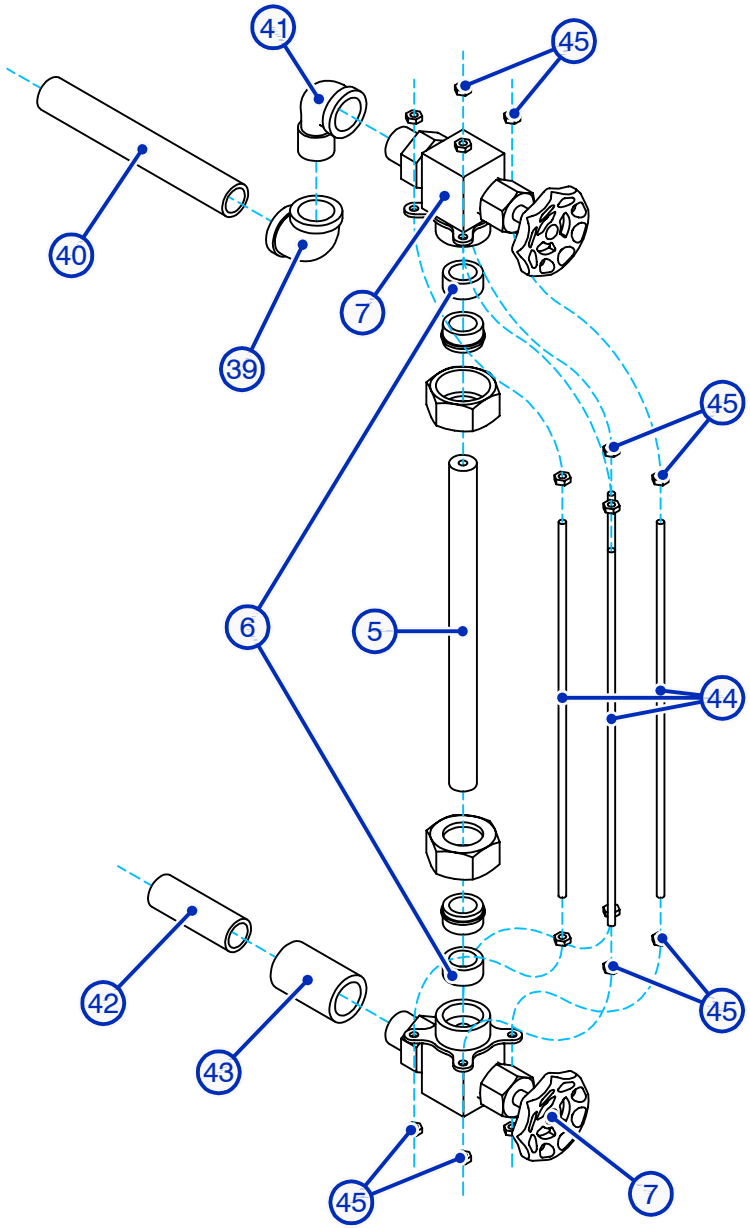

	PART #	Description	QTY.
5	0012064	9-1/2" GLASS GAUGE	1
6	0016017B	BEVELED SIGHT GLASS SEAL KIT (SET OF TWO)	1
7	0022142	1/2" S.S. SEISMIC FIXTURE SET (SET OF 2)	1
39	0022022	1/2" S.S. ELBOW - SCH 40	1
40	0022031	1/2" X 6" S.S. NIPPLE - SCH 40	1
41	0022021	1/2" S.S. STREET ELBOW	1
42	0022014A	1/2" X 2-1/2" S.S. NIPPLE - SCH 40	1
43	0022039	1/2" S.S. COUPLING FULL	1
44	0022721	10-32 S.S. ALL THREAD (CUT TO 11")	4
45	0020026	10-32 HEX NUT	16

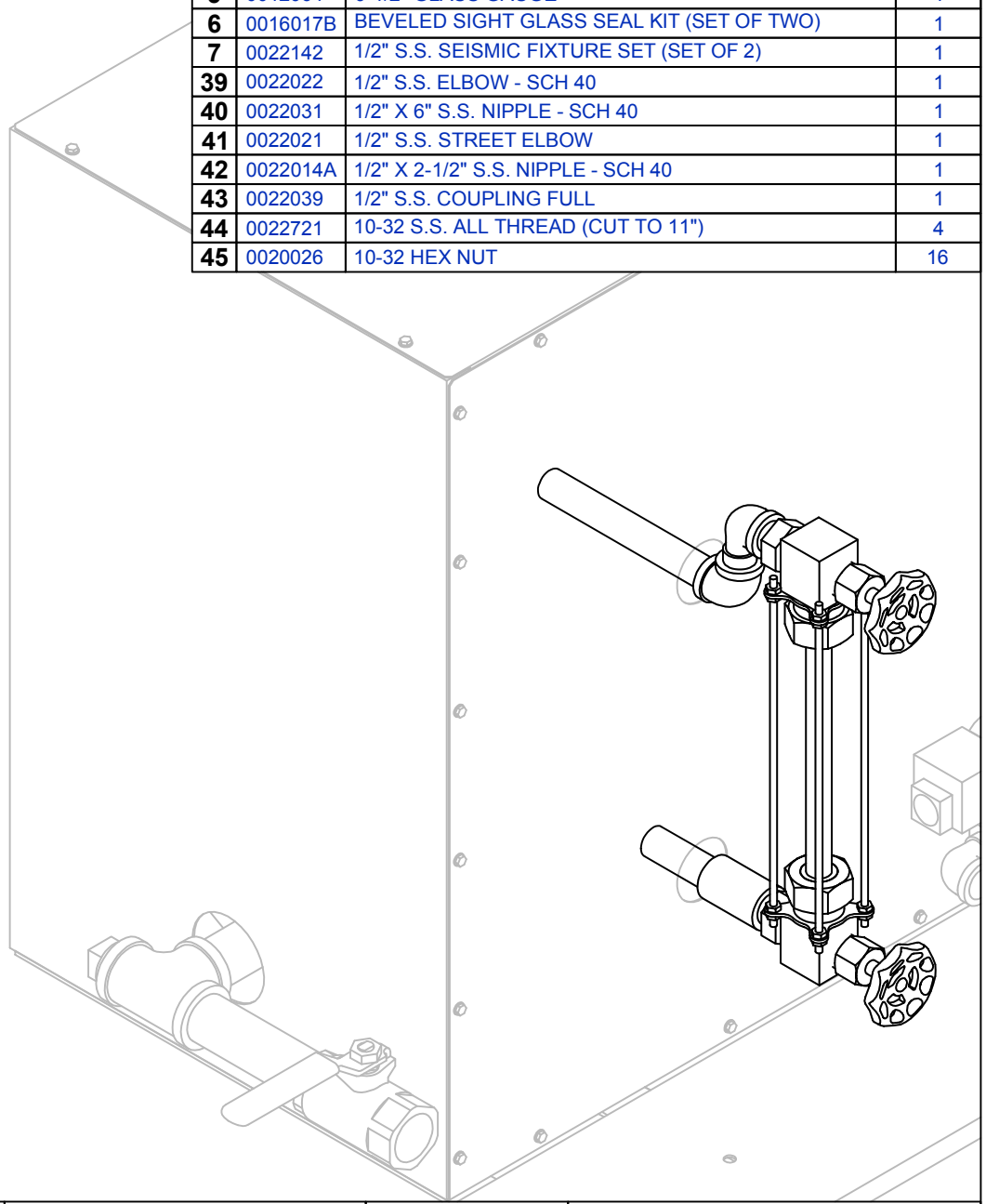

THIS DRAWING IS LOANED BY THE ELECTRO-STEAM GENERATOR CORPORATION TO THE CUSTOMER OR USER AS A GENERAL DESCRIPTION OF THE EQUIPMENT AND IS TO BE USED FOR THE PROPER INSTALLATION AND OPERATION OF THIS EQUIPMENT. THIS DRAWING MAY NOT BE COPIED IN WHOLE OR IN PART NOR CAN IT BE USED FOR THE MANUFACTURE OF ANY EQUIPMENT WITHOUT THE EXPRESS WRITTEN PERMISSION OF THE ELLECTRO-STEAM GENERATOR CORPORATION.

THIS DRAWING CONTAINS PROPRIETARY AND CONFIDENTIAL INFORMATION BELONGING TO THE ELECTRO-STEAM GENERATOR CORPORATION. THIS DRAWING MAY NOT BE REPRODUCED OR COPIED IN WHOLE OR IN PART, NOR CAN THE INFORMATION CONTAINED BE USED FOR ANY PURPOSE WITHOUT THE EXPRESS WRITTEN PERMISSION OF THE ELECTRO-STEAM GENERATOR CORPORATION. THIS DRAWING IS THE PROPERTY OF THE ELECTRO-STEAM GENERATOR CORPORATION AND MUST BE RETURNED UPON REQUEST.

DWG. TITLE: S.S. LB 40-60 SIGHT GLASS PLUMBING ASSEMBLY

CUSTOMER: -

MODEL UNIT: S.S. LB 40-60

ENGINEER:	B.BOYD	09-17-15
DRAWN BY:	C.FERRARA	09-17-15
APPROVED:	B.BOYD	09-17-15

ELECTRO-STEAM GENERATOR CORP.
50 INDEL AVENUE, RANCOCAS, NJ. 08073

DWG NO: -

REV: A

SCALE: N/A

SHEET: 3 OF 5

	PRESS.	PART #	Description	QTY.
8	LOW	0022589	0-15 PSI S.S. "CONTROL" PRESSURE SWITCH	1
	HIGH	0022590B	0-90 PSI S.S. "CONTROL" PRESSURE SWITCH	
9	LOW	0022589A	0-15 PSI S.S. "SAFETY" PRESSURE SWITCH W/ RESET	1
	HIGH	0022590	0-90 PSI S.S. "SAFETY" PRESSURE SWITCH W/ RESET	
11	LOW	0022427A	0-30 PSI S.S. PRESSURE GAUGE	1
	HIGH	0022088	0-160 PSI S.S. PRESSURE GAUGE	
31		0022023	1/2" S.S. UNION - SCH 40	1
32		0022026	1/2" CLOSE S.S. NIPPLE - SCH 40	3
34		0022018	1/2" S.S. TEE - SCH 40	3
35		0022024	1/2" S.S. PLUG - SCH 40	1
39		0022022	1/2" S.S. ELBOW - SCH 40	2
40		0022031	1/2" X 6" S.S. NIPPLE - SCH 40	1
46		0022730	1/2" S.S. PIGTAIL NIPPLE - SCH 40	1
47		0022027	1/2" X 2" S.S. NIPPLE - SCH 40	1
48		0022110	1/2" X 1/4" S.S. HEX REDUCER BUSHING	1
49		0022008	1/4" CLOSE S.S. NIPPLE - SCH 40	1
50		0022134	1/4" S.S. BALL VALVE	1

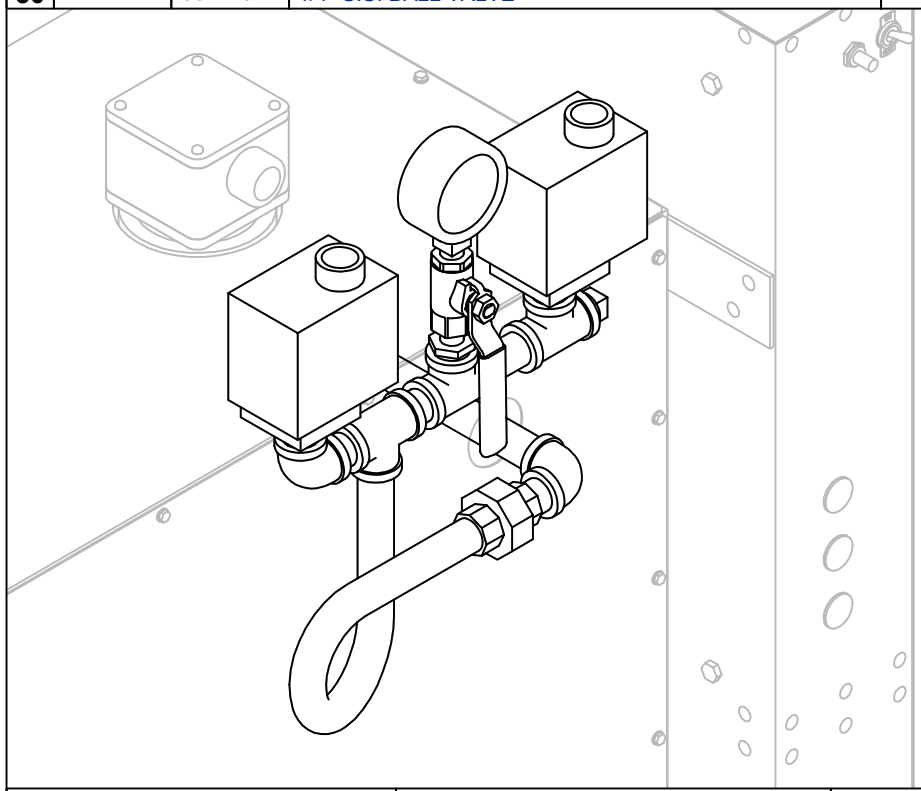

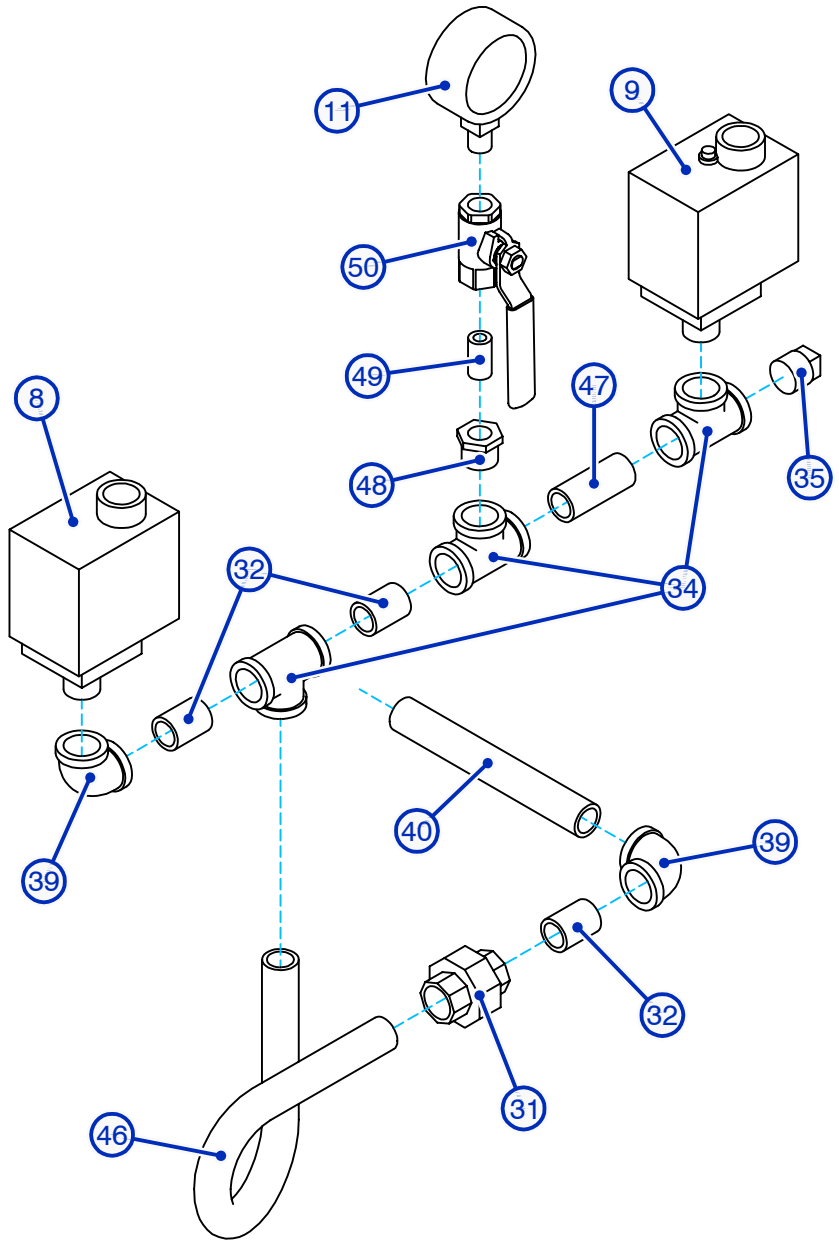

THIS DRAWING IS LOANED BY THE ELECTRO-STEAM GENERATOR CORPORATION TO THE CUSTOMER OR USER AS A GENERAL DESCRIPTION OF THE EQUIPMENT AND IS TO BE USED FOR THE PROPER INSTALLATION AND OPERATION OF THIS EQUIPMENT. THIS DRAWING MAY NOT BE COPIED IN WHOLE OR IN PART NOR CAN IT BE USED FOR THE MANUFACTURE OF ANY EQUIPMENT WITHOUT THE EXPRESS WRITTEN PERMISSION OF THE ELLECTRO-STEAM GENERATOR CORPORATION.

THIS DRAWING CONTAINS PROPRIETARY AND CONFIDENTIAL INFORMATION BELONGING TO THE ELECTRO-STEAM GENERATOR CORPORATION. THIS DRAWING MAY NOT BE REPRODUCED OR COPIED IN WHOLE OR IN PART, NOR CAN THE INFORMATION CONTAINED BE USED FOR ANY PURPOSE WITHOUT THE EXPRESS WRITTEN PERMISSION OF THE ELECTRO-STEAM GENERATOR CORPORATION. THIS DRAWING IS THE PROPERTY OF THE ELECTRO-STEAM GENERATOR CORPORATION AND MUST BE RETURNED UPON REQUEST.

DWG. TITLE: S.S. LB 40-60 PRESSURE SWITCH PLUMBING ASSY.

CUSTOMER: -

MODEL UNIT:	S.S. LB 40-60		
ENGINEER:	B.BOYD	09-17-15	
DRAWN BY:	C.FERRARA	09-17-15	
APPROVED:	B.BOYD	09-17-15	

ELECTRO-STEAM GENERATOR CORP.
50 INDEL AVENUE, RANCOCAS, NJ. 08073

DWG NO: -

REV: A

SCALE: N/A

SHEET: 4 OF 5

	PRESS.	PART #	Description	QTY.
12		0022116	3/4" S.S. BALL VALVE	1
13		0022116A	1" S.S. BALL VALVE	1
15	LOW	0022133	3/4" X 3/4" S.S. SAFETY VALVE - 15 PSI - 310 LB/HR	1
	HIGH	0022714	3/4" X 3/4" S.S. SAFETY VALVE - 100 PSI - 646 LB/HR	
35		0022024	1/2" S.S. PLUG (ORIFICE HOLE DRILLED THROUGH)	1
51		0022034	3/4" X 4-1/2" S.S. NIPPLE - SCH 40	1
52		0022037	1" X 3-1/2" S.S. NIPPLE - SCH 40	1
53		0022106A	1" S.S. TEE - SCH 40	1
54		0022165	1" S.S. PLUG - SCH 40	1
55		0022711	1" X 6" S.S. NIPPLE - SCH 40	1

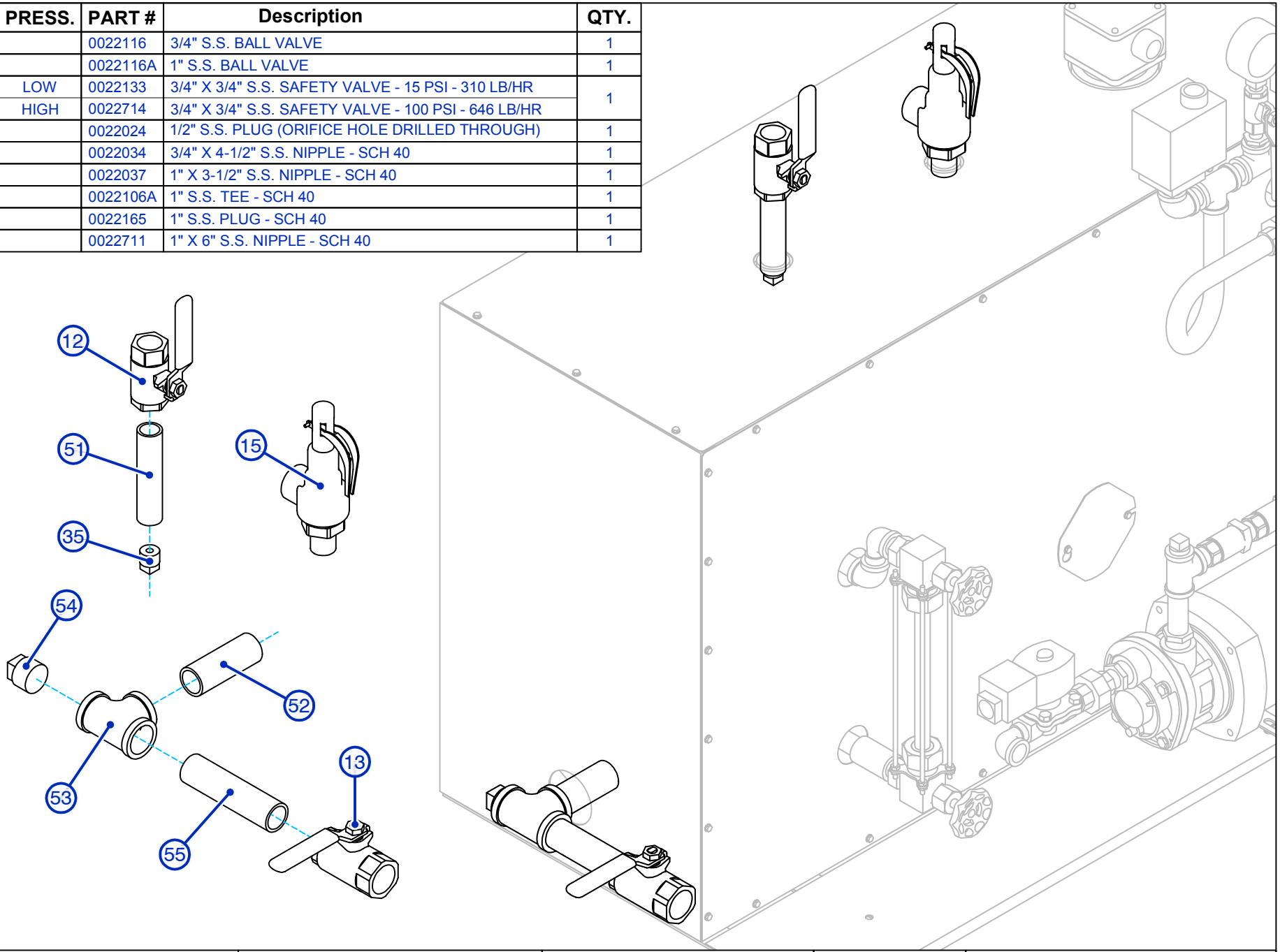

THIS DRAWING IS LOANED BY THE ELECTRO-STEAM GENERATOR CORPORATION TO THE CUSTOMER OR USER AS A GENERAL DESCRIPTION OF THE EQUIPMENT AND IS TO BE USED FOR THE PROPER INSTALLATION AND OPERATION OF THIS EQUIPMENT. THIS DRAWING MAY NOT BE COPIED IN WHOLE OR IN PART NOR CAN IT BE USED FOR THE MANUFACTURE OF ANY EQUIPMENT WITHOUT THE EXPRESS WRITTEN PERMISSION OF THE ELLECTRO-STEAM GENERATOR CORPORATION.

THIS DRAWING CONTAINS PROPRIETARY AND CONFIDENTIAL INFORMATION BELONGING TO THE ELECTRO-STEAM GENERATOR CORPORATION. THIS DRAWING MAY NOT BE REPRODUCED OR COPIED IN WHOLE OR IN PART, NOR CAN THE INFORMATION CONTAINED BE USED FOR ANY PURPOSE WITHOUT THE EXPRESS WRITTEN PERMISSION OF THE ELECTRO-STEAM GENERATOR CORPORATION. THIS DRAWING IS THE PROPERTY OF THE ELECTRO-STEAM GENERATOR CORPORATION AND MUST BE RETURNED UPON REQUEST.

DWG. TITLE: S.S. LB 40-60 STEAM OUTLET, DRAIN, & SAFETY PLUMB. ASSY.

CUSTOMER: -

MODEL UNIT: S.S. LB 40-60		
ENGINEER:	B.BOYD	09-18-15
DRAWN BY:	C.FERRARA	09-18-15
APPROVED:	B.BOYD	09-18-15

ELECTRO-STEAM GENERATOR CORP.
50 INDEL AVENUE, RANCOCAS, NJ. 08073

DWG NO: -

REV: A

SCALE: N/A

SHEET: 5 OF 5

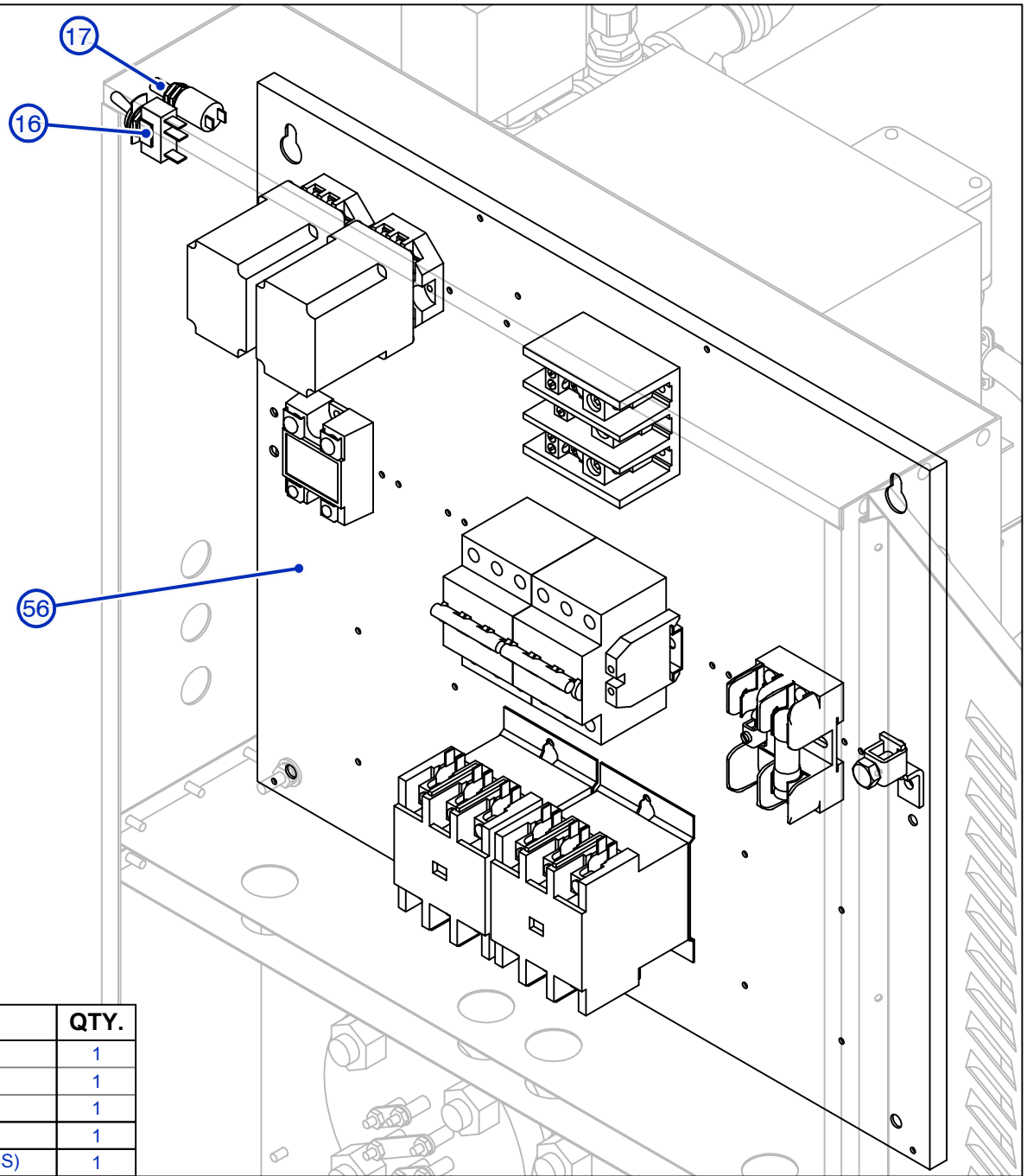

	PART #	Description	QTY.
16	0013133	TOGGLE SWITCH	1
	0013134	ON/OFF INDICATING PLATE	1
	0013135	LOCKING RING	1
17	0013155A	OPTIONAL MANUAL LOW WATER RESET (NO)	1
56	-	ELECTRICAL PANEL (SEE ELEC. PANEL DRAWINGS)	1

THIS DRAWING IS LOANED BY THE ELECTRO-STEAM GENERATOR CORPORATION TO THE CUSTOMER OR USER AS A GENERAL DESCRIPTION OF THE EQUIPMENT AND IS TO BE USED FOR THE PROPER INSTALLATION AND OPERATION OF THIS EQUIPMENT. THIS DRAWING MAY NOT BE COPIED IN WHOLE OR IN PART NOR CAN IT BE USED FOR THE MANUFACTURE OF ANY EQUIPMENT WITHOUT THE EXPRESS WRITTEN PERMISSION OF THE ELLECTRO-STEAM GENERATOR CORPORATION.

THIS DRAWING CONTAINS PROPRIETARY AND CONFIDENTIAL INFORMATION BELONGING TO THE ELECTRO-STEAM GENERATOR CORPORATION. THIS DRAWING MAY NOT BE REPRODUCED OR COPIED IN WHOLE OR IN PART, NOR CAN THE INFORMATION CONTAINED BE USED FOR ANY PURPOSE WITHOUT THE EXPRESS WRITTEN PERMISSION OF THE ELECTRO-STEAM GENERATOR CORPORATION. THIS DRAWING IS THE PROPERTY OF THE ELECTRO-STEAM GENERATOR CORPORATION AND MUST BE RETURNED UPON REQUEST.

DWG. TITLE: S.S. LB 40-60 CONTROL BOX ELECTRICAL PARTS ASSEMBLY

CUSTOMER: -

MODEL UNIT:	S.S. LB 40-60		
ENGINEER:	C.FERRARA	09-28-15	
DRAWN BY:	C.FERRARA	09-28-15	
APPROVED:	B.WEIGLE	09-28-15	

ELECTRO-STEAM GENERATOR CORP.
50 INDEL AVENUE, RANCOCAS, NJ. 08073

DWG NO: -

REV: A

SCALE: N/A

SHEET: 1 OF 3

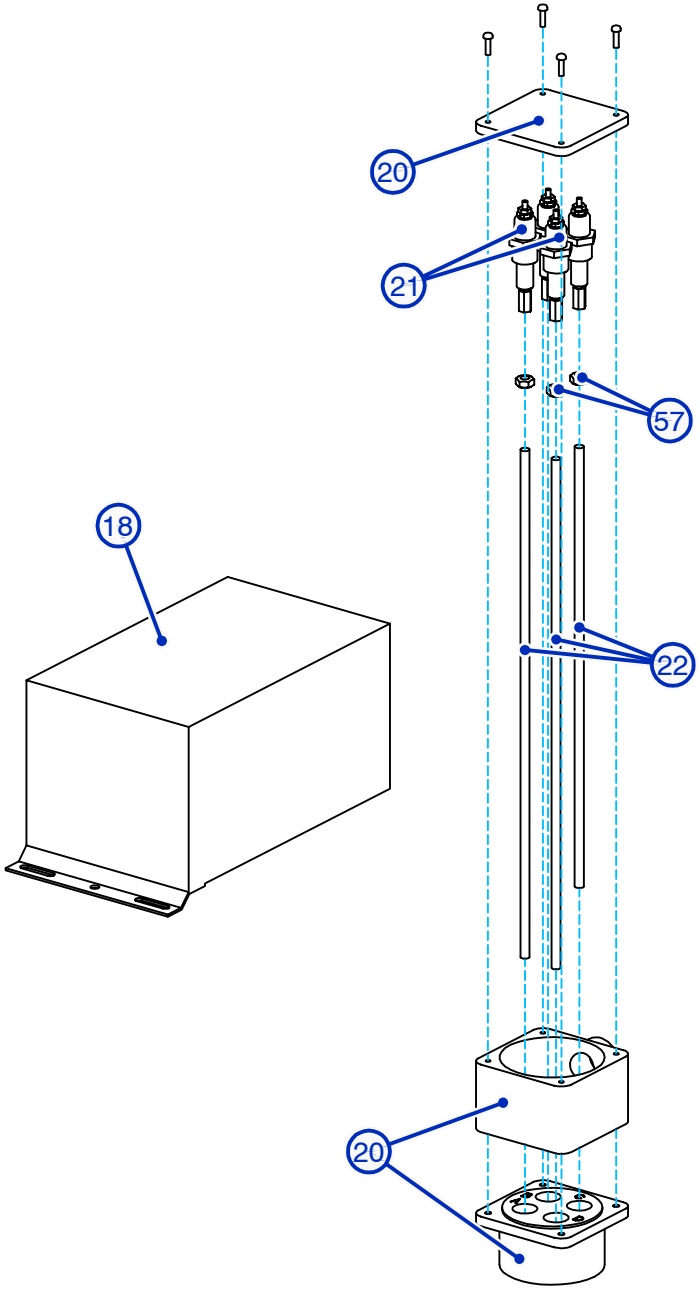

	VOLTAGE	PART #	Description	QTY.
18	200-480 VAC	0013060	OPTIONAL TRANSFORMER FOR 120V CONTROLS (1 KVA 190-480V PRIMARY - 120/240V SECONDARY)	1
	550-600 VAC	0013040	OPTIONAL TRANSFORMER FOR 120V CONTROLS (1 KVA 600V PRIMARY - 120/240V SECONDARY)	1
20		0022016	S.S. PROBE HOLDER ASSEMBLY (INCLUDES FOUR S.S. PROBE PLUGS)	1
21		0013207	STAINLESS STEEL PROBE PLUG	1
22		0015070D	15-3/8" S.S. PROBE RODS CUT TO SIZE (A = 15", C = 13", & D/G = 15")	3
57		0020019B	1/4"-20 STAINLESS STEEL NUT	1

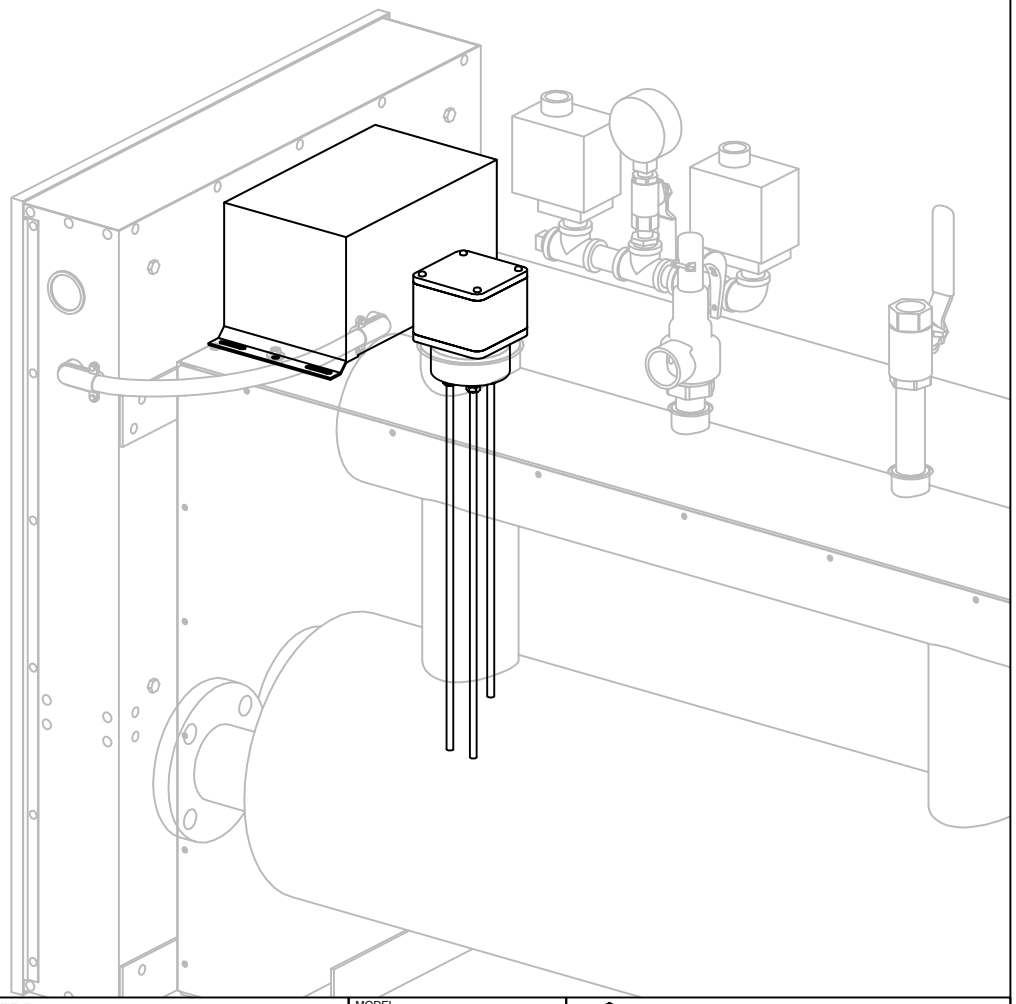

THIS DRAWING IS LOANED BY THE ELECTRO-STEAM GENERATOR CORPORATION TO THE CUSTOMER OR USER AS A GENERAL DESCRIPTION OF THE EQUIPMENT AND IS TO BE USED FOR THE PROPER INSTALLATION AND OPERATION OF THIS EQUIPMENT. THIS DRAWING MAY NOT BE COPIED IN WHOLE OR IN PART NOR CAN IT BE USED FOR THE MANUFACTURE OF ANY EQUIPMENT WITHOUT THE EXPRESS WRITTEN PERMISSION OF THE ELLECTRO-STEAM GENERATOR CORPORATION.

THIS DRAWING CONTAINS PROPRIETARY AND CONFIDENTIAL INFORMATION BELONGING TO THE ELECTRO-STEAM GENERATOR CORPORATION. THIS DRAWING MAY NOT BE REPRODUCED OR COPIED IN WHOLE OR IN PART, NOR CAN THE INFORMATION CONTAINED BE USED FOR ANY PURPOSE WITHOUT THE EXPRESS WRITTEN PERMISSION OF THE ELECTRO-STEAM GENERATOR CORPORATION. THIS DRAWING IS THE PROPERTY OF THE ELECTRO-STEAM GENERATOR CORPORATION AND MUST BE RETURNED UPON REQUEST.

DWG. TITLE: S.S. LB 40-60 PROBES & TRANS. ELECTRICAL PARTS ASSEMBLY

CUSTOMER: -

MODEL UNIT: S.S. LB 40-60

ENGINEER:	C.FERRARA	09-17-15
DRAWN BY:	C.FERRARA	09-17-15
APPROVED:	B.WEIGLE	09-17-15

ELECTRO-STEAM GENERATOR CORP.
50 INDEL AVENUE, RANCOCAS, NJ. 08073

DWG NO: -

REV: A

SCALE: N/A

SHEET: 2 OF 3

	MODEL	VOLTAGE	PART #	Description	QTY.
23	LB 40	200-210 / 360-380 VAC	0010048	20 KW 208 VAC S.S. HEATING ELEMENT	2
		220-240 / 400-415 VAC	0010032	20 KW 230 VAC S.S. HEATING ELEMENT	
		440-480 VAC	0010033	20 KW 480 VAC S.S. HEATING ELEMENT	
		550-600 VAC	0010098	20 KW 600 VAC S.S. HEATING ELEMENT	
	LB 50	200-210 / 360-380 VAC	0010120	25 KW 208 VAC S.S. HEATING ELEMENT	
		220-240 / 400-415 VAC	0010034	25 KW 230 VAC S.S. HEATING ELEMENT	
		440-480 VAC	0010049	25 KW 480 VAC S.S. HEATING ELEMENT	
		550-600 VAC	0010215	25 KW 600 VAC S.S. HEATING ELEMENT	
	LB 60	200-210 / 360-380 VAC	0010034A	30 KW 208 VAC S.S. HEATING ELEMENT	
		220-240 / 400-415 VAC	0010035	30 KW 230 VAC S.S. HEATING ELEMENT	
		440-480 VAC	0010036	30 KW 480 VAC S.S. HEATING ELEMENT	
		550-600 VAC	0010110	30 KW 600 VAC S.S. HEATING ELEMENT	

	PART #	Description	QTY.
24	0010055	RING GASKET	2
25	0011519	S.S. LB 40-60 CHAMBER	1
58	0015039	5/8"-11 X 2-1/2" BOLT & 5/8"-11 NUT (SA-193-B7)	8

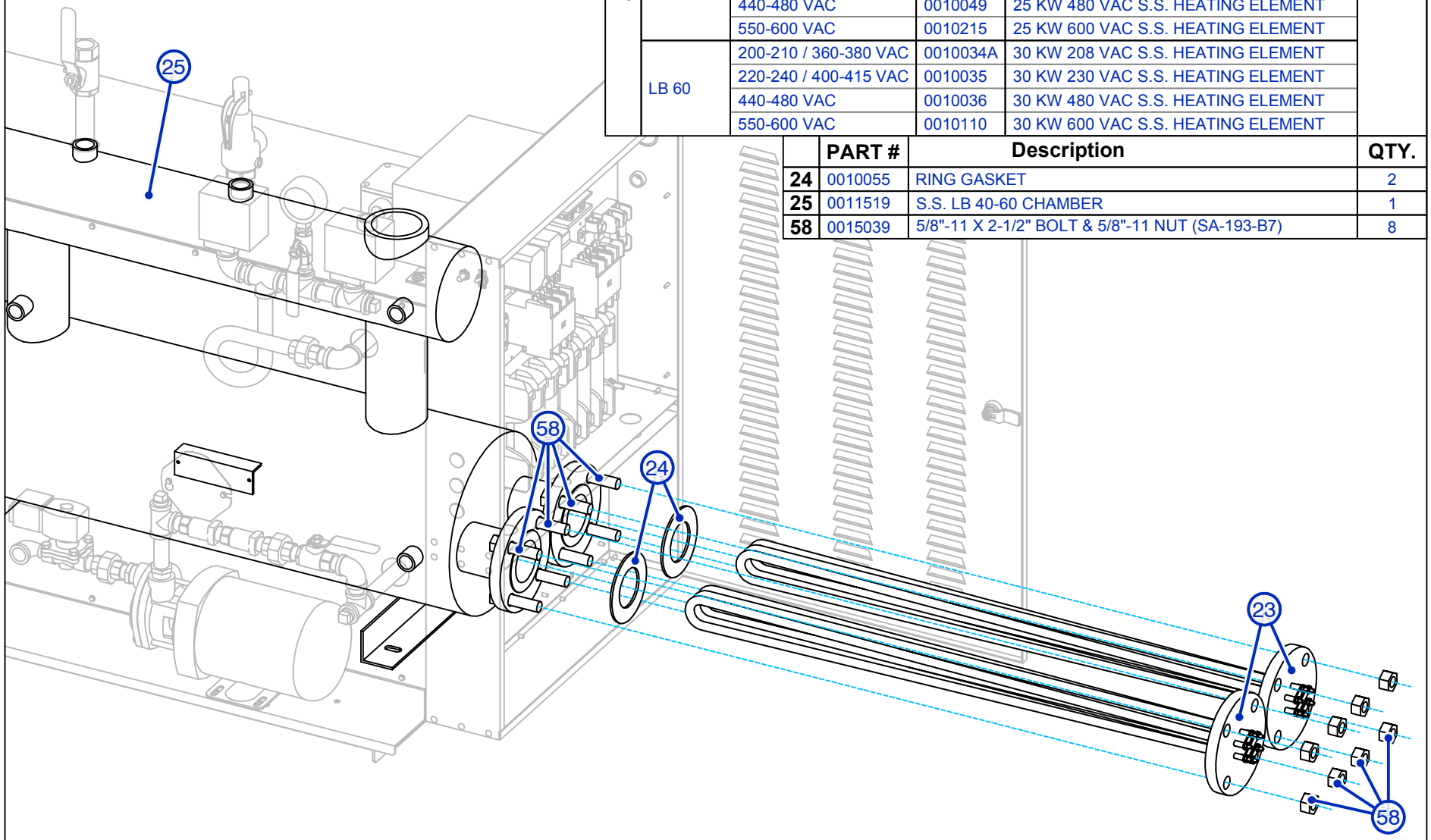

THIS DRAWING IS LOANED BY THE ELECTRO-STEAM GENERATOR CORPORATION TO THE CUSTOMER OR USER AS A GENERAL DESCRIPTION OF THE EQUIPMENT AND IS TO BE USED FOR THE PROPER INSTALLATION AND OPERATION OF THIS EQUIPMENT. THIS DRAWING MAY NOT BE COPIED IN WHOLE OR IN PART NOR CAN IT BE USED FOR THE MANUFACTURE OF ANY EQUIPMENT WITHOUT THE EXPRESS WRITTEN PERMISSION OF THE ELLECTRO-STEAM GENERATOR CORPORATION.

THIS DRAWING CONTAINS PROPRIETARY AND CONFIDENTIAL INFORMATION BELONGING TO THE ELECTRO-STEAM GENERATOR CORPORATION. THIS DRAWING MAY NOT BE REPRODUCED OR COPIED IN WHOLE OR IN PART, NOR CAN THE INFORMATION CONTAINED BE USED FOR ANY PURPOSE WITHOUT THE EXPRESS WRITTEN PERMISSION OF THE ELECTRO-STEAM GENERATOR CORPORATION. THIS DRAWING IS THE PROPERTY OF THE ELECTRO-STEAM GENERATOR CORPORATION AND MUST BE RETURNED UPON REQUEST.

DWG. TITLE: S.S. LB 40-60 HEATERS ELECTRICAL PARTS ASSEMBLY

CUSTOMER: -

MODEL UNIT: S.S. LB 40-60

ENGINEER:	C.FERRARA	09-25-15
DRAWN BY:	C.FERRARA	09-25-15
APPROVED:	B.WEIGLE	09-25-15

ELECTRO-STEAM GENERATOR CORP.
50 INDEL AVENUE, RANCOCAS, NJ. 08073

DWG NO: -

REV: A

SCALE: N/A

SHEET: 3 OF 3

S.S. LB 40-60 (200-240V)

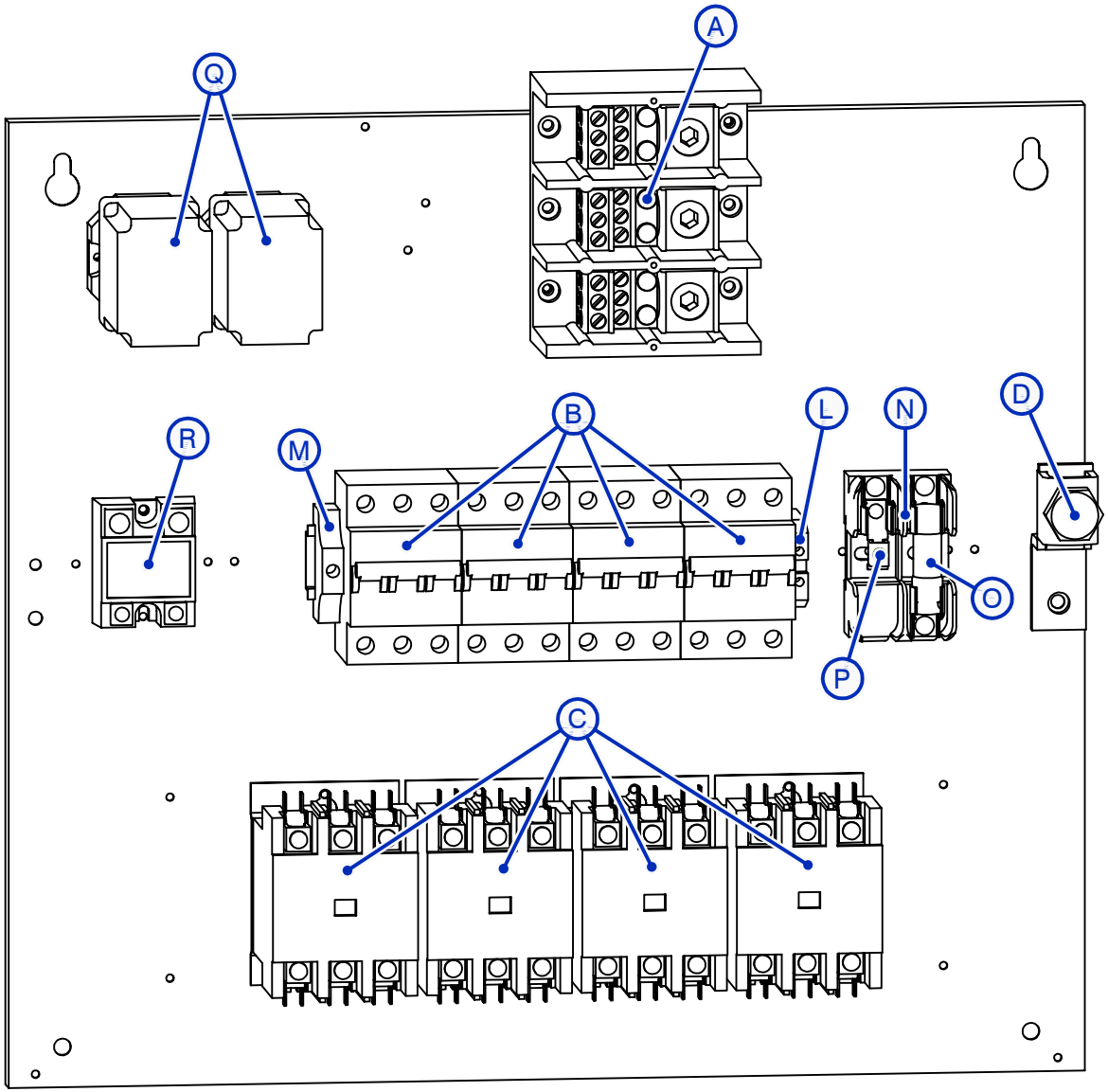

	MODEL	PART #	Description	QTY.
A		0013064	200 AMP TERMINAL BLOCK	1
B	LB 40	0026135	40A 480V 3-POLE BREAKER	4
	LB 50	0026137	50A 480V 3-POLE BREAKER	
	LB 60	0026138	60A 480V 3-POLE BREAKER	
C		0013069	CONTACTOR (75 AMP RES / 60 AMP FLA)	4
D		0013129B	GROUND LUG (SLU-300)	1
L		0026023	10MM DIN RAIL GND LUG	1
M		0026003	END STOP	1
N		0013053	30 AMP 250V 2 POLE FUSE BLOCK (CLS-R)	1
O		0013041	15 AMP 250V FUSE (RK5)	1
P		0013128	NEUTRAL LUG (SLU-35)	1
Q		0013219	HIGH SENSITIVE WATER RELAY (5.5 MOHM)	1
R		0013903	MOTOR RELAY (HIGH PRESSURE ONLY)	1

THIS DRAWING IS LOANED BY THE ELECTRO-STEAM GENERATOR CORPORATION TO THE CUSTOMER OR USER AS A GENERAL DESCRIPTION OF THE EQUIPMENT AND IS TO BE USED FOR THE PROPER INSTALLATION AND OPERATION OF THIS EQUIPMENT. THIS DRAWING MAY NOT BE COPIED IN WHOLE OR IN PART NOR CAN IT BE USED FOR THE MANUFACTURE OF ANY EQUIPMENT WITHOUT THE EXPRESS WRITTEN PERMISSION OF THE ELLECTRO-STEAM GENERATOR CORPORATION.

THIS DRAWING CONTAINS PROPRIETARY AND CONFIDENTIAL INFORMATION BELONGING TO THE ELECTRO-STEAM GENERATOR CORPORATION. THIS DRAWING MAY NOT BE REPRODUCED OR COPIED IN WHOLE OR IN PART, NOR CAN THE INFORMATION CONTAINED BE USED FOR ANY PURPOSE WITHOUT THE EXPRESS WRITTEN PERMISSION OF THE ELECTRO-STEAM GENERATOR CORPORATION. THIS DRAWING IS THE PROPERTY OF THE ELECTRO-STEAM GENERATOR CORPORATION AND MUST BE RETURNED UPON REQUEST.

DWG. TITLE: S.S. LB 40-60 (200-240 VAC) ELECTRICAL PANEL ASSEMBLY

CUSTOMER: -

MODEL UNIT: S.S. LB 40-60

ENGINEER:	C.FERRARA	10-07-15
DRAWN BY:	C.FERRARA	10-07-15
APPROVED:	B.WEIGLE	10-07-15

ELECTRO-STEAM GENERATOR CORP.
50 INDEL AVENUE, RANCOCAS, NJ. 08073

DWG NO: -

REV: A

SCALE: N/A

SHEET: 1 OF 4

S.S. LB 40-60 (200-240V) (TRANS.)

Includes additional parts for Transformer Option

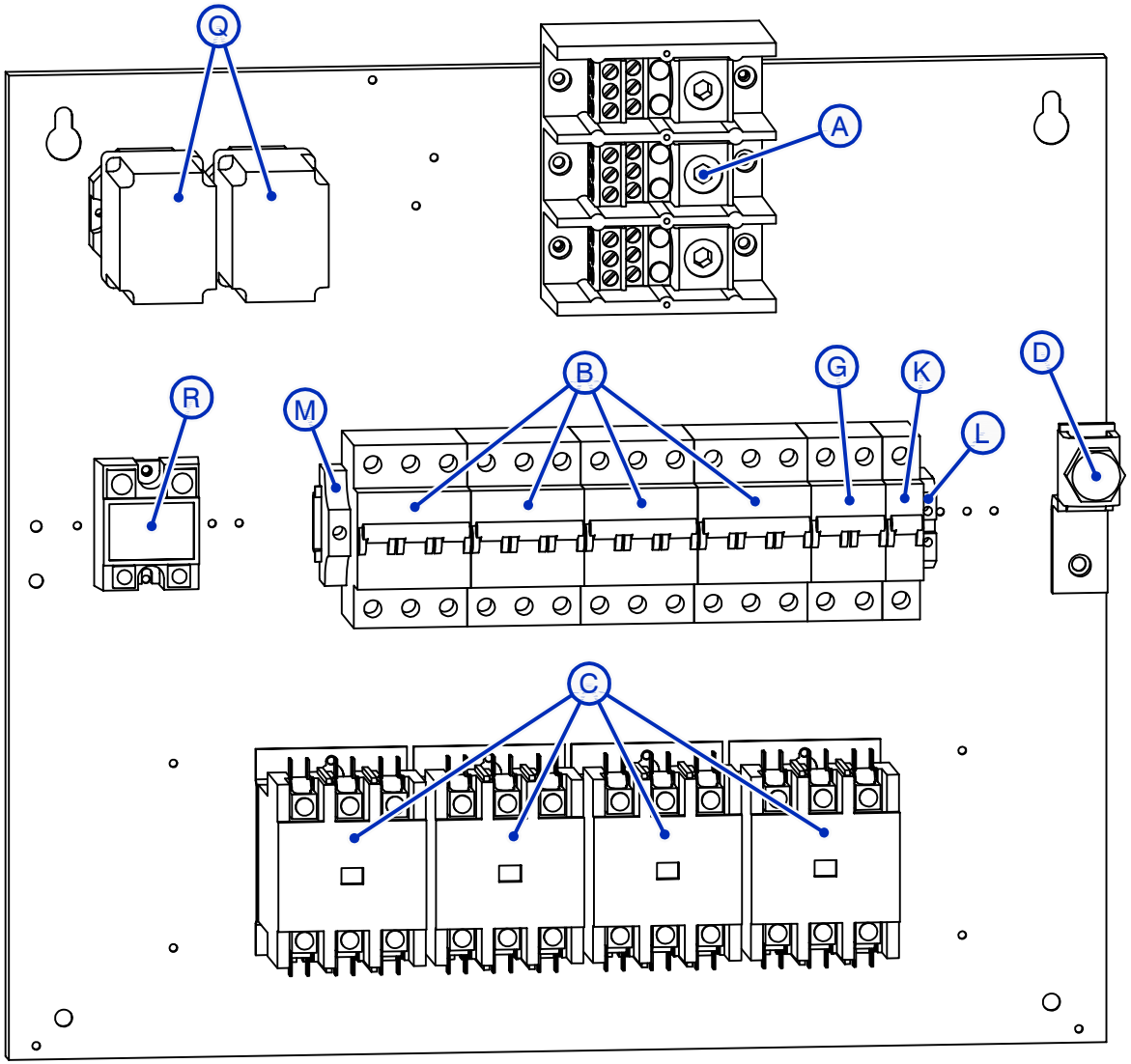

	MODEL	PART #	Description	QTY.
A		0013064	200 AMP TERMINAL BLOCK	1
B	LB 40	0026135	40A 480V 3-POLE BREAKER	4
	LB 50	0026137	50A 480V 3-POLE BREAKER	
	LB 60	0026138	60A 480V 3-POLE BREAKER	
C		0013069	CONTACTOR (75 AMP RES / 60 AMP FLA)	4
D		0013129B	GROUND LUG (SLU-300)	1
G		0026107	10A 480V 2-POLE BREAKER (TRANSFORMER OPTION)	1
K		0026089	15A 480V 1-POLE BREAKER	1
L		0026023	10MM DIN RAIL GND LUG	1
M		0026003	END STOP	1
Q		0013219	HIGH SENSITIVE WATER RELAY (5.5 MOHM)	1
R		0013903	MOTOR RELAY (HIGH PRESSURE ONLY)	1

THIS DRAWING IS LOANED BY THE ELECTRO-STEAM GENERATOR CORPORATION TO THE CUSTOMER OR USER AS A GENERAL DESCRIPTION OF THE EQUIPMENT AND IS TO BE USED FOR THE PROPER INSTALLATION AND OPERATION OF THIS EQUIPMENT. THIS DRAWING MAY NOT BE COPIED IN WHOLE OR IN PART NOR CAN IT BE USED FOR THE MANUFACTURE OF ANY EQUIPMENT WITHOUT THE EXPRESS WRITTEN PERMISSION OF THE ELLECTRO-STEAM GENERATOR CORPORATION.

THIS DRAWING CONTAINS PROPRIETARY AND CONFIDENTIAL INFORMATION BELONGING TO THE ELECTRO-STEAM GENERATOR CORPORATION. THIS DRAWING MAY NOT BE REPRODUCED OR COPIED IN WHOLE OR IN PART, NOR CAN THE INFORMATION CONTAINED BE USED FOR ANY PURPOSE WITHOUT THE EXPRESS WRITTEN PERMISSION OF THE ELECTRO-STEAM GENERATOR CORPORATION. THIS DRAWING IS THE PROPERTY OF THE ELECTRO-STEAM GENERATOR CORPORATION AND MUST BE RETURNED UPON REQUEST.

DWG. TITLE: S.S. LB 40-60 (200-240V) (TRANS) ELECTRICAL PANEL ASSEMBLY

CUSTOMER: -

MODEL UNIT: S.S. LB 40-60

ENGINEER:	C.FERRARA	10-07-15
DRAWN BY:	C.FERRARA	10-07-15
APPROVED:	B.WEIGLE	10-07-15

ELECTRO-STEAM GENERATOR CORP.
50 INDEL AVENUE, RANCOCAS, NJ. 08073

DWG NO: -

REV: A

SCALE: N/A

SHEET: 2 OF 4

S.S. LB 40-60 (360-600V)

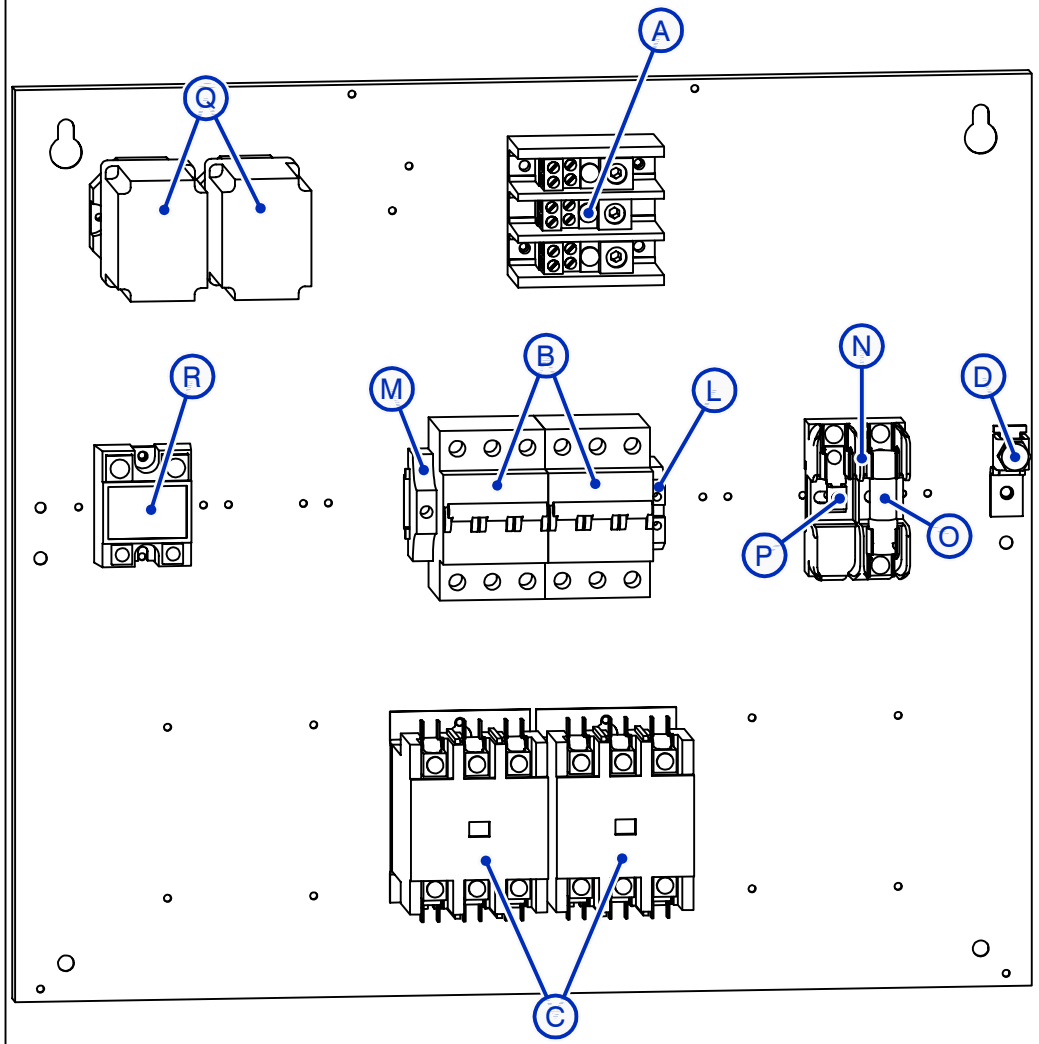

	MODEL	VOLTAGE	PART #	Description	QTY.
A	LB 40,50	360-600 VAC	0013061	100 AMP TERMINAL BLOCK	1
	LB 60	440-600 VAC			
		360-415 VAC	0013064	200 AMP TERMINAL BLOCK	
B	LB 40	380-415 VAC	0026135	40A 480V 3-POLE BREAKER	2
		440-480 VAC	0026133	30A 480V 3-POLE BREAKER	
		550-600 VAC	0026144	25A 600V 3-POLE BREAKER	
	LB 50	380-415 VAC	0026137	50A 480V 3-POLE BREAKER	
		440-480 VAC	0026135	40A 480V 3-POLE BREAKER	
		550-600 VAC	0026145	32A 600V 3-POLE BREAKER	
	LB 60	380-415 VAC	0026138	60A 480V 3-POLE BREAKER	
		440-480 VAC	0026137	50A 480V 3-POLE BREAKER	
		550-600 VAC	0026146	40A 600V 3-POLE BREAKER	
C	LB 40	380-415 VAC	0013069	CONTACTOR (75 AMP RES / 60 AMP FLA)	2
		440-600 VAC	0013067	CONTACTOR (50 AMP RES / 40 AMP FLA)	
	LB 50	550-600 VAC			
		380-480 VAC	0013069	CONTACTOR (75 AMP RES / 60 AMP FLA)	
	LB 60	380-600 VAC			
D	LB 40,50	360-600 VAC	0013129	GROUND LUG (SLU-125)	1
	LB 60	440-600 VAC			
		360-415 VAC	0013129B	GROUND LUG (SLU-300)	
L			0026023	10MM DIN RAIL GND LUG	1
M			0026003	END STOP	1
N			0013053	30 AMP 250V 2 POLE FUSE BLOCK (CLS-R)	1
O			0013041	15 AMP 250V FUSE (RK5)	1
P			0013128	NEUTRAL LUG (SLU-35)	1
Q			0013219	HIGH SENSITIVE WATER RELAY (5.5 MOHM)	1
R			0013903	MOTOR RELAY (HIGH PRESSURE ONLY)	1

THIS DRAWING IS LOANED BY THE ELECTRO-STEAM GENERATOR CORPORATION TO THE CUSTOMER OR USER AS A GENERAL DESCRIPTION OF THE EQUIPMENT AND IS TO BE USED FOR THE PROPER INSTALLATION AND OPERATION OF THIS EQUIPMENT. THIS DRAWING MAY NOT BE COPIED IN WHOLE OR IN PART NOR CAN IT BE USED FOR THE MANUFACTURE OF ANY EQUIPMENT WITHOUT THE EXPRESS WRITTEN PERMISSION OF THE ELLECTRO-STEAM GENERATOR CORPORATION.

THIS DRAWING CONTAINS PROPRIETARY AND CONFIDENTIAL INFORMATION BELONGING TO THE ELECTRO-STEAM GENERATOR CORPORATION. THIS DRAWING MAY NOT BE REPRODUCED OR COPIED IN WHOLE OR IN PART, NOR CAN THE INFORMATION CONTAINED BE USED FOR ANY PURPOSE WITHOUT THE EXPRESS WRITTEN PERMISSION OF THE ELECTRO-STEAM GENERATOR CORPORATION. THIS DRAWING IS THE PROPERTY OF THE ELECTRO-STEAM GENERATOR CORPORATION AND MUST BE RETURNED UPON REQUEST.

DWG. TITLE: S.S. LB 40-60 (360-600V) ELECTRICAL PANEL ASSEMBLY

CUSTOMER: -

MODEL UNIT: S.S. LB 40-60

ENGINEER:	C.FERRARA	10-07-15
DRAWN BY:	C.FERRARA	10-07-15
APPROVED:	B.WEIGLE	10-07-15

ELECTRO-STEAM GENERATOR CORP.
50 INDEL AVENUE, RANCOCAS, NJ. 08073

DWG NO: -

REV: A

SCALE: N/A

SHEET: 3 OF 4

S.S. LB 40-60 (360-600V) (TRANS.)

Includes additional parts for Transformer Option

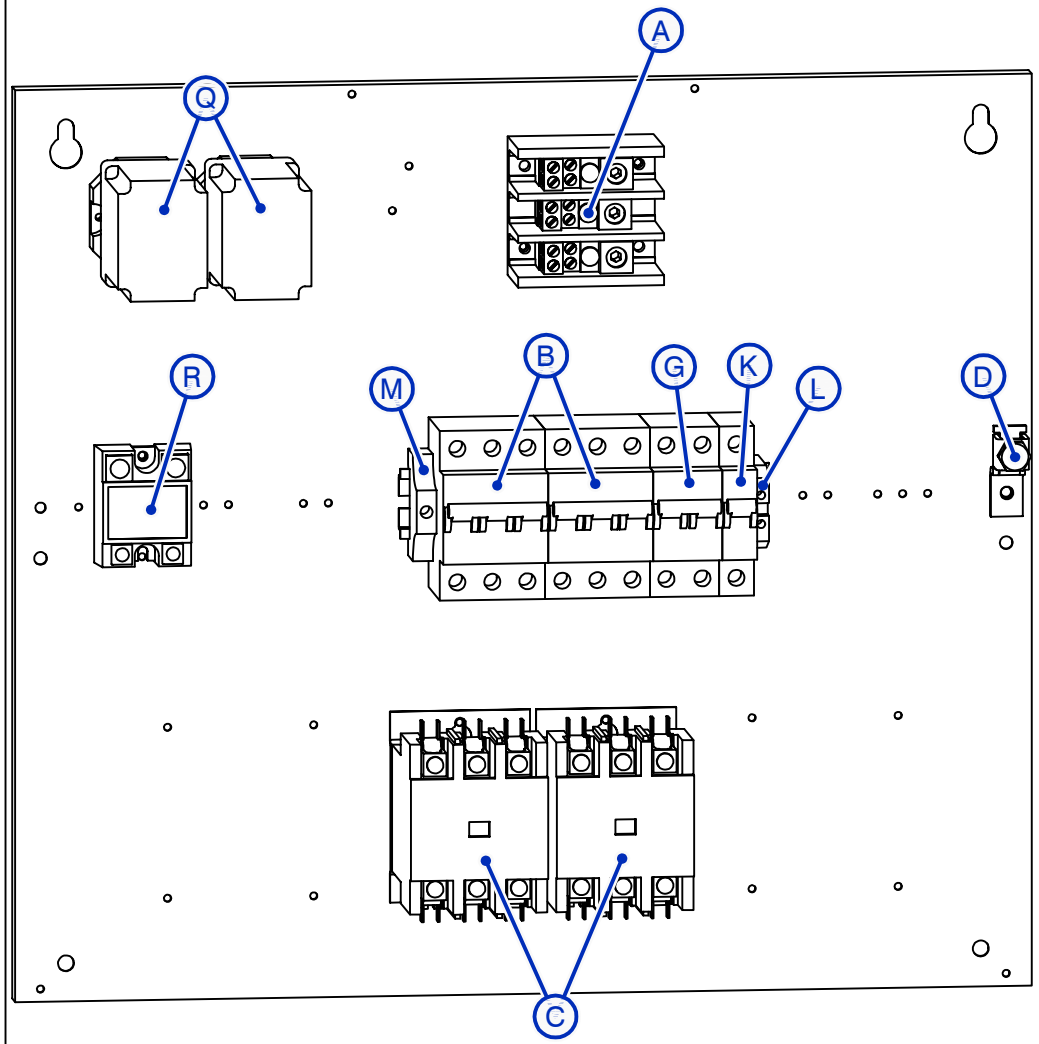

	MODEL	VOLTAGE	PART #	Description	QTY.
A	LB 40,50	360-600 VAC	0013061	100 AMP TERMINAL BLOCK	1
	LB 60	440-600 VAC			
		360-415 VAC	0013064	200 AMP TERMINAL BLOCK	
B	LB 40	380-415 VAC	0026135	40A 480V 3-POLE BREAKER	2
		440-480 VAC	0026133	30A 480V 3-POLE BREAKER	
		550-600 VAC	0026144	25A 600V 3-POLE BREAKER	
	LB 50	380-415 VAC	0026137	50A 480V 3-POLE BREAKER	
		440-480 VAC	0026135	40A 480V 3-POLE BREAKER	
		550-600 VAC	0026145	32A 600V 3-POLE BREAKER	
	LB 60	380-415 VAC	0026138	60A 480V 3-POLE BREAKER	
		440-480 VAC	0026137	50A 480V 3-POLE BREAKER	
		550-600 VAC	0026146	40A 600V 3-POLE BREAKER	
C	LB 40	380-415 VAC	0013069	CONTACTOR (75 AMP RES / 60 AMP FLA)	2
		440-600 VAC	0013067	CONTACTOR (50 AMP RES / 40 AMP FLA)	
	LB 50	550-600 VAC			
		380-480 VAC	0013069	CONTACTOR (75 AMP RES / 60 AMP FLA)	
	LB 60	380-600 VAC			
D	LB 40,50	360-600 VAC	0013129	GROUND LUG (SLU-125)	1
	LB 60	440-600 VAC			
		360-415 VAC	0013129B	GROUND LUG (SLU-300)	
G		380-415 VAC	0026316	8A 480V 2-POLE BREAKER (TRANSFORMER OPTION)	1
		440-480 VAC	0026106	6A 480V 2-POLE BREAKER (TRANSFORMER OPTION)	
		550-600 VAC	0026140	4A 600V 2-POLE BREAKER (TRANSFORMER OPTION)	
K			0026089	15A 480V 1-POLE BREAKER	1
L			0026023	10MM DIN RAIL GND LUG	1
M			0026003	END STOP	1
Q			0013219	HIGH SENSITIVE WATER RELAY (5.5 MOHM)	1
R			0013903	MOTOR RELAY (HIGH PRESSURE ONLY)	1

THIS DRAWING IS LOANED BY THE ELECTRO-STEAM GENERATOR CORPORATION TO THE CUSTOMER OR USER AS A GENERAL DESCRIPTION OF THE EQUIPMENT AND IS TO BE USED FOR THE PROPER INSTALLATION AND OPERATION OF THIS EQUIPMENT. THIS DRAWING MAY NOT BE COPIED IN WHOLE OR IN PART NOR CAN IT BE USED FOR THE MANUFACTURE OF ANY EQUIPMENT WITHOUT THE EXPRESS WRITTEN PERMISSION OF THE ELLECTRO-STEAM GENERATOR CORPORATION.

THIS DRAWING CONTAINS PROPRIETARY AND CONFIDENTIAL INFORMATION BELONGING TO THE ELECTRO-STEAM GENERATOR CORPORATION. THIS DRAWING MAY NOT BE REPRODUCED OR COPIED IN WHOLE OR IN PART, NOR CAN THE INFORMATION CONTAINED BE USED FOR ANY PURPOSE WITHOUT THE EXPRESS WRITTEN PERMISSION OF THE ELECTRO-STEAM GENERATOR CORPORATION. THIS DRAWING IS THE PROPERTY OF THE ELECTRO-STEAM GENERATOR CORPORATION AND MUST BE RETURNED UPON REQUEST.

DWG. TITLE: S.S. LB 40-60 (360-600V) (TRANS) ELECTRICAL PANEL ASSEMBLY

CUSTOMER: -

MODEL UNIT: S.S. LB 40-60

ENGINEER:	C.FERRARA	10-07-15
DRAWN BY:	C.FERRARA	10-07-15
APPROVED:	B.WEIGLE	10-07-15

ELECTRO-STEAM GENERATOR CORP.
50 INDEL AVENUE, RANCOCAS, NJ. 08073

DWG NO: -

REV: A

SCALE: N/A

SHEET: 4 OF 4

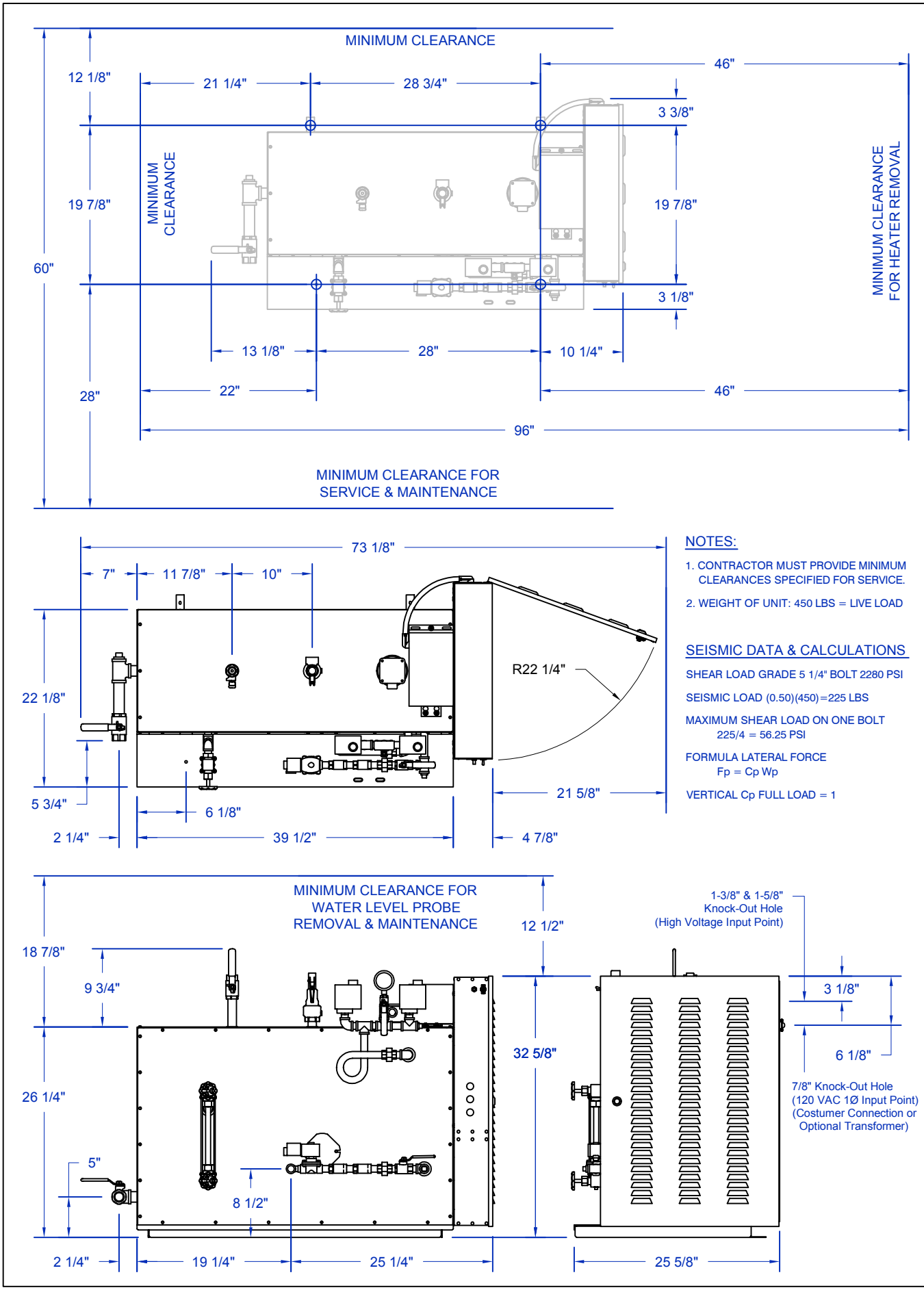

NOTES:

1. CONTRACTOR MUST PROVIDE MINIMUM CLEARANCES SPECIFIED FOR SERVICE.
2. WEIGHT OF UNIT: 450 LBS = LIVE LOAD

SEISMIC DATA & CALCULATIONS

SHEAR LOAD GRADE 5 1/4" BOLT 2280 PSI

SEISMIC LOAD (0.50)(450)=225 LBS

MAXIMUM SHEAR LOAD ON ONE BOLT
225/4 = 56.25 PSI

FORMULA LATERAL FORCE
Fp = Cp Wp

VERTICAL Cp FULL LOAD = 1

ELECTRO-STEAM GENERATOR CORP.
50 INDEL AVENUE, RANCOCAS, NJ. 08073

REV: A | SCALE: N/A | SHEET: 1 OF 2

DWG NO: -

MODEL UNIT: S.S. LB 40-60

ENGINEER:	DLC	07-22-15
DRAWN BY:	C.FERRARA	10-01-15
APPROVED:	B.WEIGLE	10-01-15

DWG. TITLE: S.S. LB 40-60 (L) INSTALLATION DATA DRAWING

CUSTOMER: -

THIS DRAWING CONTAINS PROPRIETARY AND CONFIDENTIAL INFORMATION BELONGING TO THE ELECTRO-STEAM GENERATOR CORPORATION. THIS DRAWING MAY NOT BE REPRODUCED OR COPIED IN WHOLE OR IN PART, NOR CAN THE INFORMATION CONTAINED BE USED FOR ANY PURPOSE WITHOUT THE EXPRESS WRITTEN PERMISSION OF THE ELECTRO-STEAM GENERATOR CORPORATION. THIS DRAWING IS THE PROPERTY OF THE ELECTRO-STEAM GENERATOR CORPORATION AND MUST BE RETURNED UPON REQUEST.

THIS DRAWING IS LOANED BY THE ELECTRO-STEAM GENERATOR CORPORATION TO THE CUSTOMER OR USER AS A GENERAL DESCRIPTION OF THE EQUIPMENT AND IS TO BE USED FOR THE PROPER INSTALLATION AND OPERATION OF THIS EQUIPMENT. THIS DRAWING MAY NOT BE COPIED IN WHOLE OR IN PART NOR CAN IT BE USED FOR THE MANUFACTURE OF ANY EQUIPMENT WITHOUT THE EXPRESS WRITTEN PERMISSION OF THE ELLECTRO-STEAM GENERATOR CORPORATION.

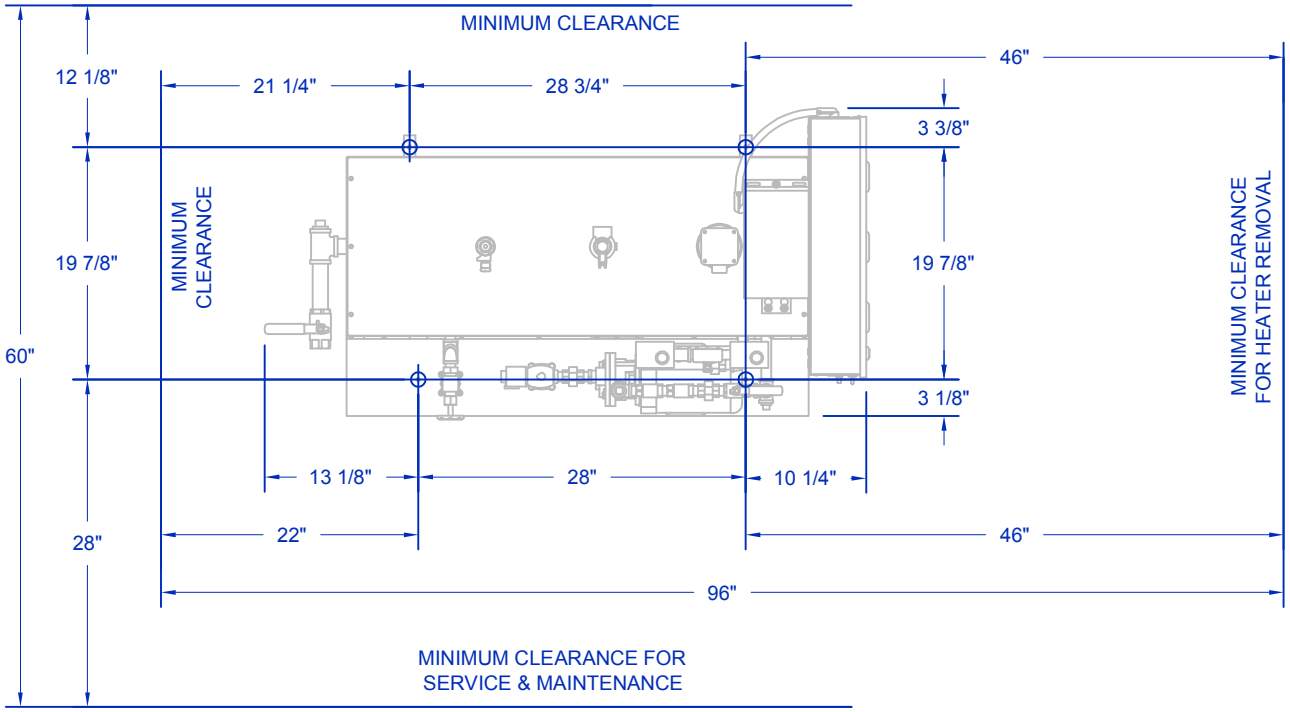

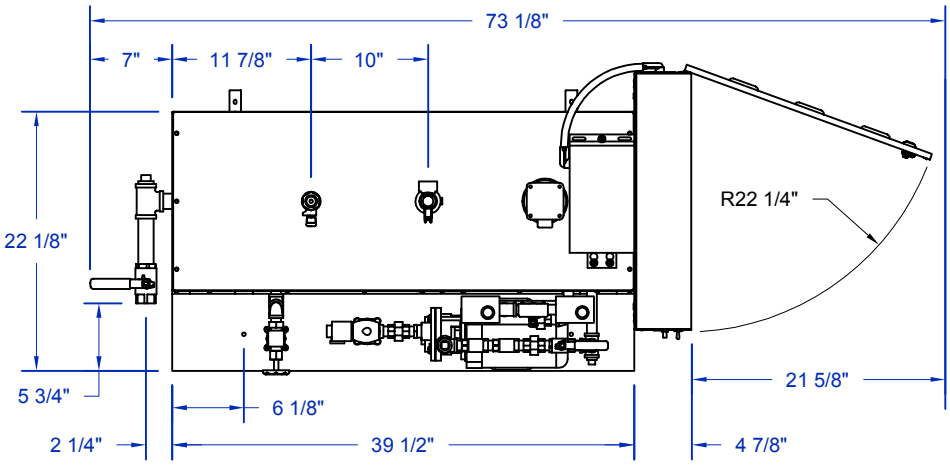

NOTES:

1. CONTRACTOR MUST PROVIDE MINIMUM CLEARANCES SPECIFIED FOR SERVICE.
2. WEIGHT OF UNIT: 450 LBS = LIVE LOAD

SEISMIC DATA & CALCULATIONS

SHEAR LOAD GRADE 5 1/4" BOLT 2280 PSI

SEISMIC LOAD (0.50)(450)=225 LBS

MAXIMUM SHEAR LOAD ON ONE BOLT
225/4 = 56.25 PSI

FORMULA LATERAL FORCE
Fp = Cp Wp

VERTICAL Cp FULL LOAD = 1

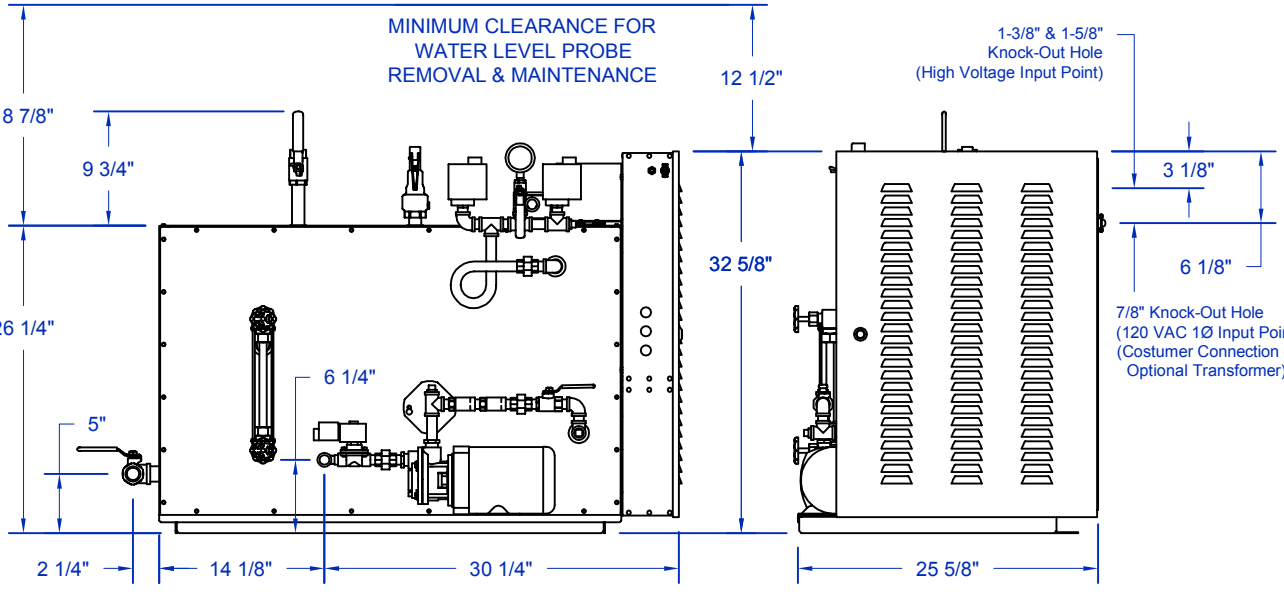

ELECTRO-STEAM GENERATOR CORP.
50 INDEL AVENUE, RANCOCAS, NJ. 08073

MODEL UNIT:	S.S. LB 40-60	REV:	A
ENGINEER:	D.LC	07-22-15	
DRAWN BY:	C.FERRARA	10-01-15	DWG NO.: -
APPROVED:	B.WEIGLE	10-01-15	SCALE: N/A
			SHEET: 2 OF 2

DWG. TITLE: S.S. LB 40-60 (H)
INSTALLATION DATA DRAWING

CUSTOMER: -

THIS DRAWING CONTAINS PROPRIETARY AND CONFIDENTIAL INFORMATION BELONGING TO THE ELECTRO-STEAM GENERATOR CORPORATION. THIS DRAWING MAY NOT BE REPRODUCED OR COPIED IN WHOLE OR IN PART, NOR CAN THE INFORMATION CONTAINED HEREIN BE USED FOR ANY PURPOSE WHATSOEVER WITHOUT THE EXPRESS WRITTEN PERMISSION OF THE ELECTRO-STEAM GENERATOR CORPORATION. THIS DRAWING IS THE PROPERTY OF THE ELECTRO-STEAM GENERATOR CORPORATION AND MUST BE RETURNED UPON REQUEST.

THIS DRAWING IS LOANED BY THE ELECTRO-STEAM GENERATOR CORPORATION TO THE CUSTOMER OR USER AS A GENERAL DESCRIPTION OF THE EQUIPMENT AND IS TO BE USED FOR THE PROPER INSTALLATION AND OPERATION OF THIS EQUIPMENT. IT SHALL NOT BE LOANED, COPIED OR USED FOR ANY PURPOSE OTHAN IT BE USED FOR THE MANUFACTURE OF ANY EQUIPMENT WITHOUT THE EXPRESS WRITTEN PERMISSION OF THE ELECTRO-STEAM GENERATOR CORPORATION.

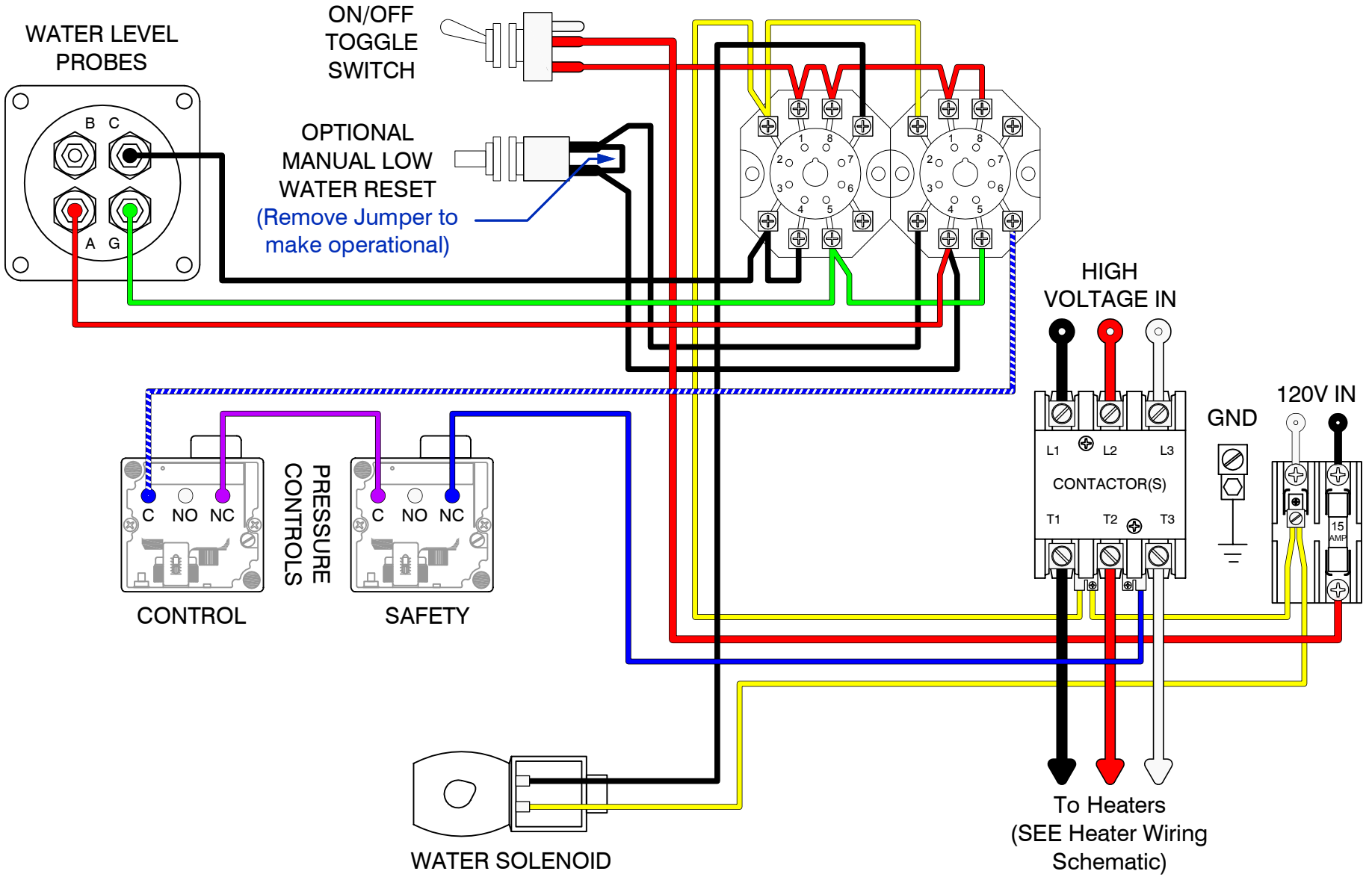

THIS DRAWING IS LOANED BY THE ELECTRO-STEAM GENERATOR CORPORATION TO THE CUSTOMER OR USER AS A GENERAL DESCRIPTION OF THE EQUIPMENT AND IS TO BE USED FOR THE PROPER INSTALLATION AND OPERATION OF THIS EQUIPMENT. THIS DRAWING MAY NOT BE COPIED IN WHOLE OR IN PART NOR CAN IT BE USED FOR THE MANUFACTURE OF ANY EQUIPMENT WITHOUT THE EXPRESS WRITTEN PERMISSION OF THE ELLECTRO-STEAM GENERATOR CORPORATION.

THIS DRAWING CONTAINS PROPRIETARY AND CONFIDENTIAL INFORMATION BELONGING TO THE ELECTRO-STEAM GENERATOR CORPORATION. THIS DRAWING MAY NOT BE REPRODUCED OR COPIED IN WHOLE OR IN PART, NOR CAN THE INFORMATION CONTAINED BE USED FOR ANY PURPOSE WITHOUT THE EXPRESS WRITTEN PERMISSION OF THE ELECTRO-STEAM GENERATOR CORPORATION. THIS DRAWING IS THE PROPERTY OF THE ELECTRO-STEAM GENERATOR CORPORATION AND MUST BE RETURNED UPON REQUEST.

DWG. TITLE:	SCHEMATIC - S.S. LB 10-240 (L) CONTROL WIRING	MODEL UNIT:	S.S. LB 10-240	ELECTRO-STEAM GENERATOR CORP. 50 INDEL AVENUE, RANCOCAS, NJ. 08073	
CUSTOMER:	-	ENGINEER:	C.FERRARA 10-06-15	DWG NO: -	REV: A
		DRAWN BY:	C.FERRARA 10-06-15		SCALE: N/A
		APPROVED:	B.WEIGLE 10-06-15		SHEET: 1 OF 4

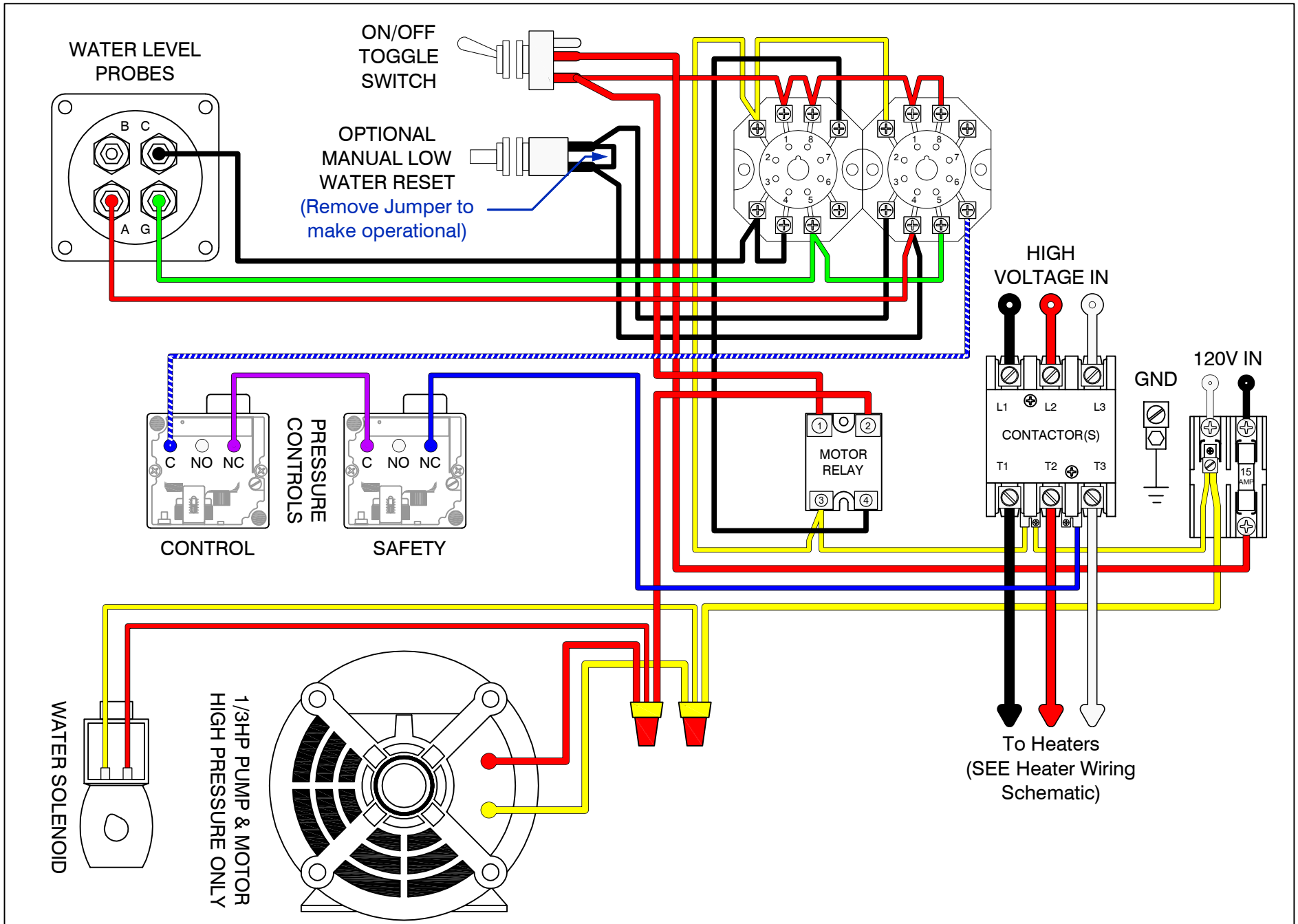

THIS DRAWING IS LOANED BY THE ELECTRO-STEAM GENERATOR CORPORATION TO THE CUSTOMER OR USER AS A GENERAL DESCRIPTION OF THE EQUIPMENT AND IS TO BE USED FOR THE PROPER INSTALLATION AND OPERATION OF THIS EQUIPMENT. THIS DRAWING MAY NOT BE COPIED IN WHOLE OR IN PART NOR CAN IT BE USED FOR THE MANUFACTURE OF ANY EQUIPMENT WITHOUT THE EXPRESS WRITTEN PERMISSION OF THE ELLECTRO-STEAM GENERATOR CORPORATION.

THIS DRAWING CONTAINS PROPRIETARY AND CONFIDENTIAL INFORMATION BELONGING TO THE ELECTRO-STEAM GENERATOR CORPORATION. THIS DRAWING MAY NOT BE REPRODUCED OR COPIED IN WHOLE OR IN PART, NOR CAN THE INFORMATION CONTAINED BE USED FOR ANY PURPOSE WITHOUT THE EXPRESS WRITTEN PERMISSION OF THE ELECTRO-STEAM GENERATOR CORPORATION. THIS DRAWING IS THE PROPERTY OF THE ELECTRO-STEAM GENERATOR CORPORATION AND MUST BE RETURNED UPON REQUEST.

DWG. TITLE:	SCHEMATIC - S.S. LB 10-240 (H) CONTROL WIRING	MODEL UNIT:	S.S. LB 10-240	ELECTRO-STEAM GENERATOR CORP. 50 INDEL AVENUE, RANCOCAS, NJ. 08073	
CUSTOMER:	-	ENGINEER:	C.FERRARA 10-06-15	DWG NO: -	REV: A
		DRAWN BY:	C.FERRARA 10-06-15		SCALE: N/A
		APPROVED:	B.WEIGLE 10-06-15		SHEET: 2 OF 4

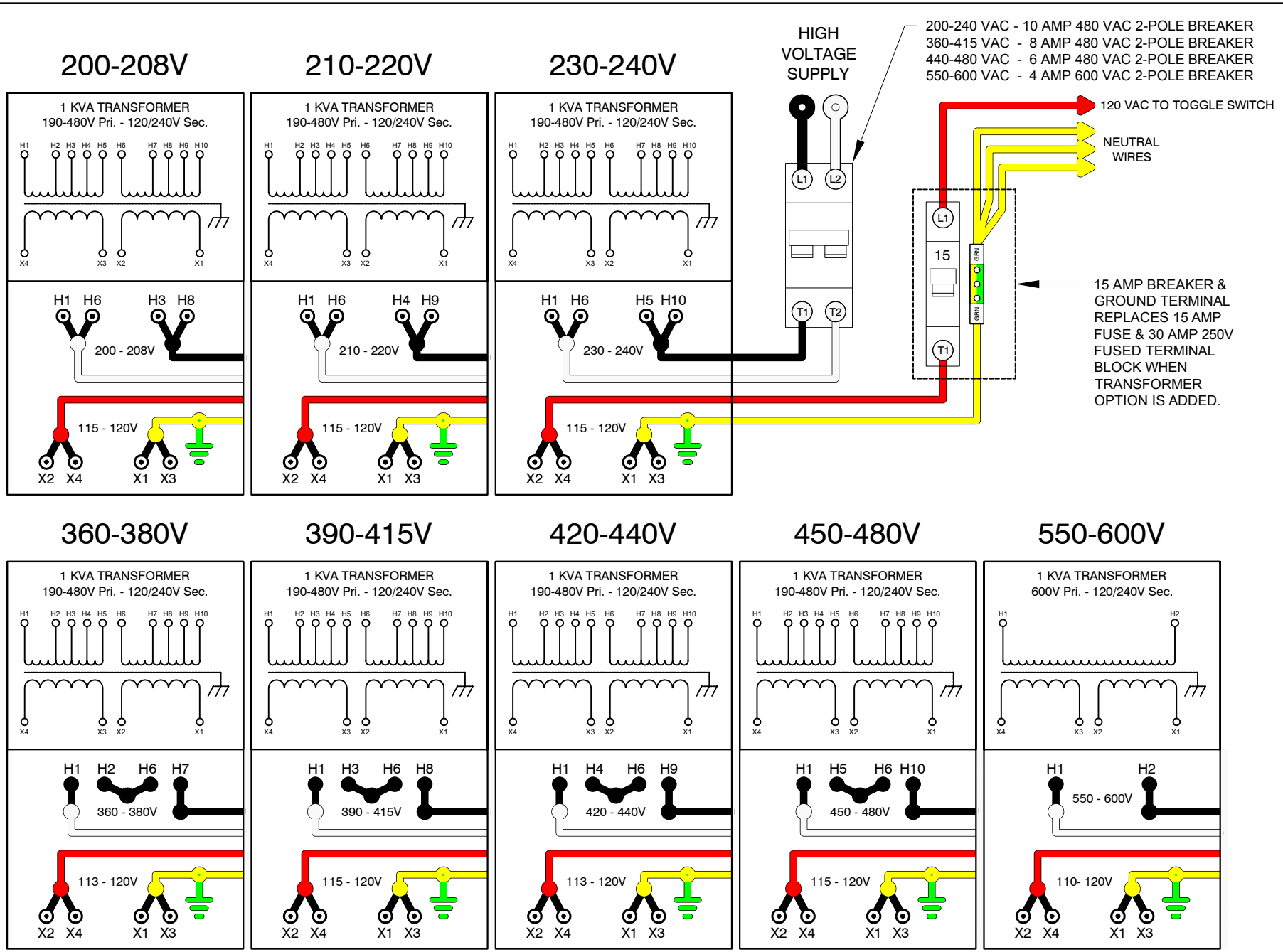

THIS DRAWING IS LOANED BY THE ELECTRO-STEAM GENERATOR CORPORATION TO THE CUSTOMER OR USER AS A GENERAL DESCRIPTION OF THE EQUIPMENT AND IS TO BE USED FOR THE PROPER INSTALLATION AND OPERATION OF THIS EQUIPMENT. THIS DRAWING MAY NOT BE COPIED IN WHOLE OR IN PART NOR CAN IT BE USED FOR THE MANUFACTURE OF ANY EQUIPMENT WITHOUT THE EXPRESS WRITTEN PERMISSION OF THE ELLECTRO-STEAM GENERATOR CORPORATION.

THIS DRAWING CONTAINS PROPRIETARY AND CONFIDENTIAL INFORMATION BELONGING TO THE ELECTRO-STEAM GENERATOR CORPORATION. THIS DRAWING MAY NOT BE REPRODUCED OR COPIED IN WHOLE OR IN PART, NOR CAN THE INFORMATION CONTAINED BE USED FOR ANY PURPOSE WITHOUT THE EXPRESS WRITTEN PERMISSION OF THE ELECTRO-STEAM GENERATOR CORPORATION. THIS DRAWING IS THE PROPERTY OF THE ELECTRO-STEAM GENERATOR CORPORATION AND MUST BE RETURNED UPON REQUEST.

DWG. TITLE:	SCHEMATIC - TRANSFORMER OPTION	MODEL UNIT:	1 KVA TRANS	ELECTRO-STEAM GENERATOR CORP. 50 INDEL AVENUE, RANCOCAS, NJ. 08073	
CUSTOMER:	-	ENGINEER:	C.FERRARA 10-21-15		
		DRAWN BY:	C.FERRARA 10-21-15	DWG NO: -	REV: A
		APPROVED:	B.WEIGLE 10-21-15		SCALE: N/A
					SHEET: 3 OF 4

40-60 KW - 200-240 VAC 3Ø

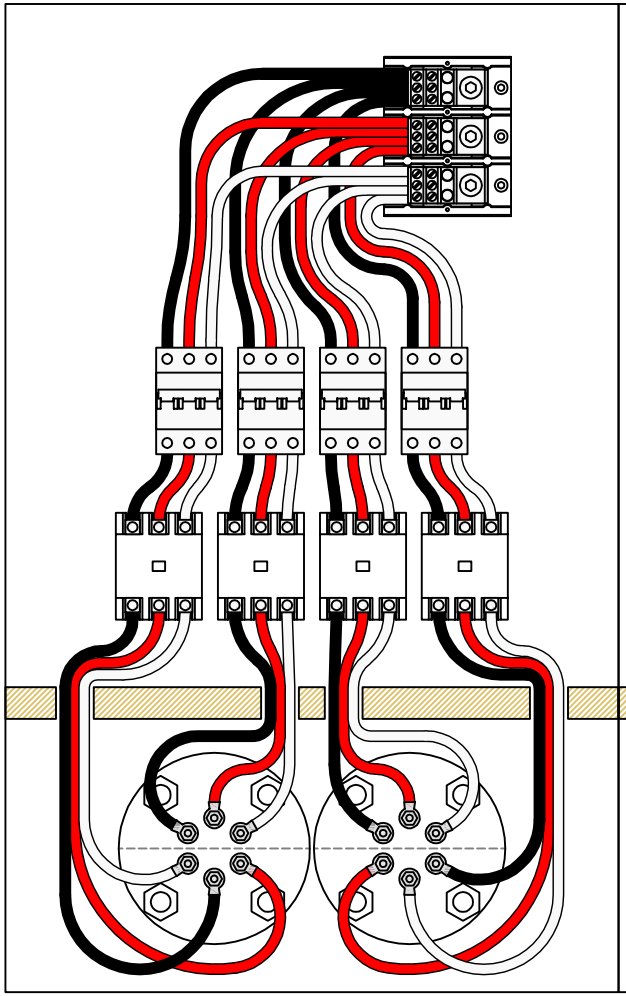

40-60 KW - 360-415 VAC 3Ø

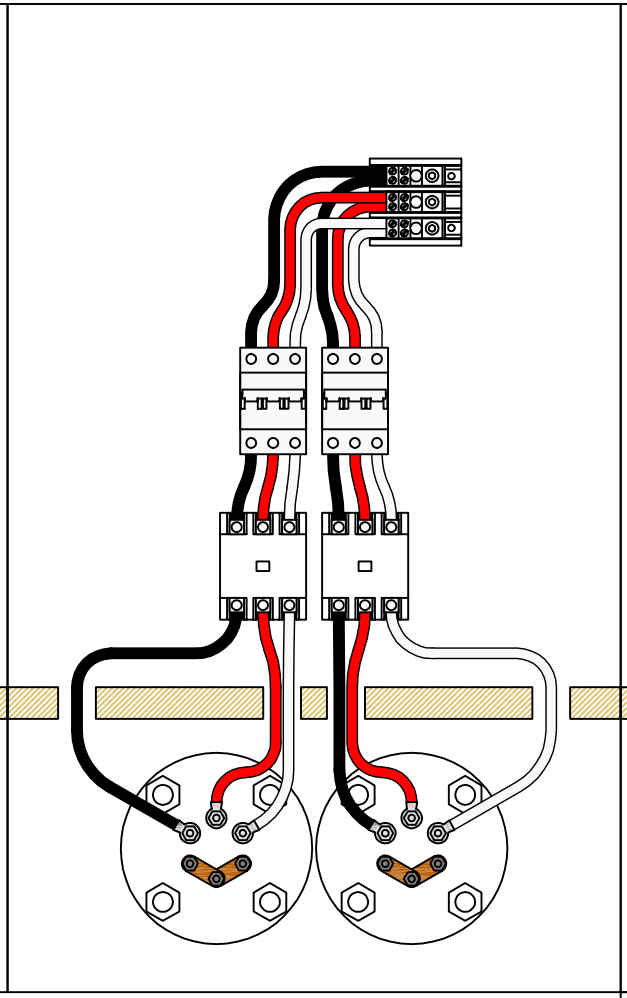

40-60 KW - 440-600 VAC 3Ø

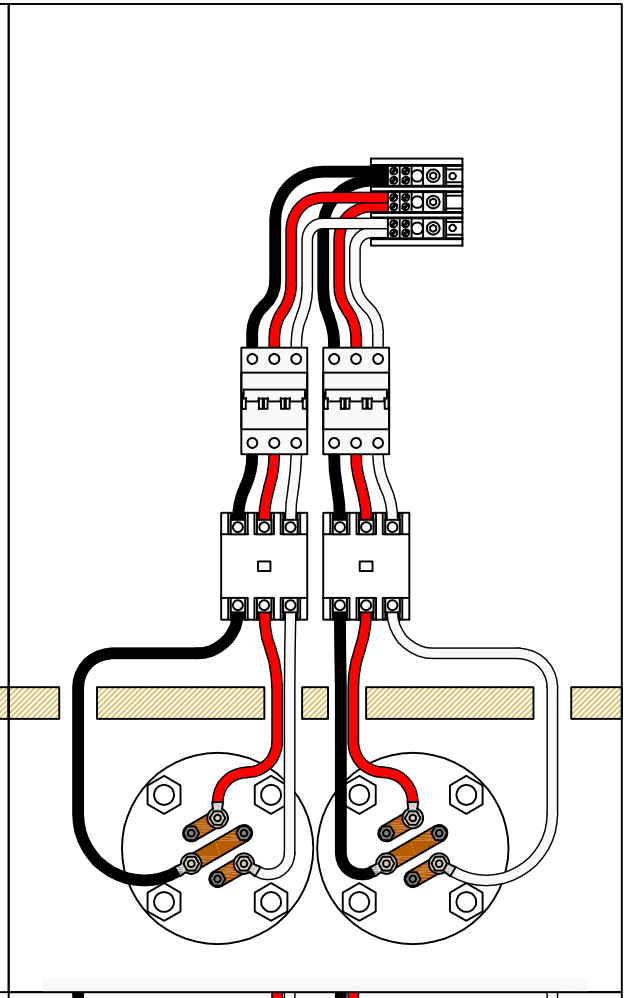

HEATER COILS MUST ORIENTED VERTICALLY FROM TOP TO BOTTOM.

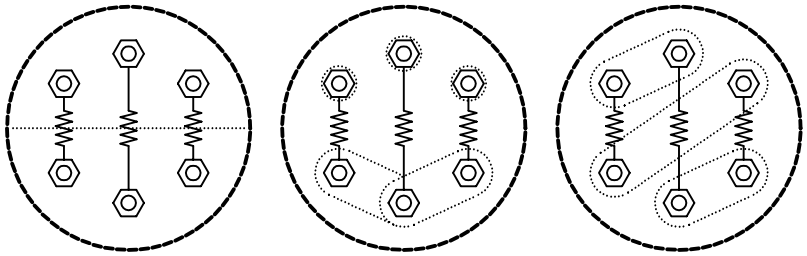

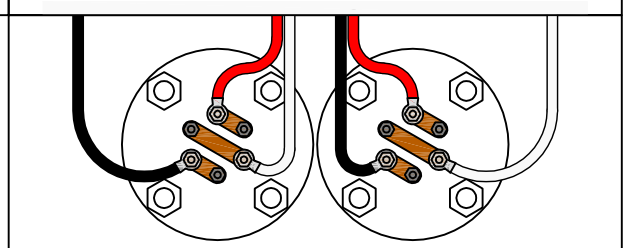

ALTERNATE JUMPER CONFIGURATION

THIS DRAWING IS LOANED BY THE ELECTRO-STEAM GENERATOR CORPORATION TO THE CUSTOMER OR USER AS A GENERAL DESCRIPTION OF THE EQUIPMENT AND IS TO BE USED FOR THE PROPER INSTALLATION AND OPERATION OF THIS EQUIPMENT. THIS DRAWING MAY NOT BE COPIED IN WHOLE OR IN PART NOR CAN IT BE USED FOR THE MANUFACTURE OF ANY EQUIPMENT WITHOUT THE EXPRESS WRITTEN PERMISSION OF THE ELLECTRO-STEAM GENERATOR CORPORATION.

THIS DRAWING CONTAINS PROPRIETARY AND CONFIDENTIAL INFORMATION BELONGING TO THE ELECTRO-STEAM GENERATOR CORPORATION. THIS DRAWING MAY NOT BE REPRODUCED OR COPIED IN WHOLE OR IN PART, NOR CAN THE INFORMATION CONTAINED BE USED FOR ANY PURPOSE WITHOUT THE EXPRESS WRITTEN PERMISSION OF THE ELECTRO-STEAM GENERATOR CORPORATION. THIS DRAWING IS THE PROPERTY OF THE ELECTRO-STEAM GENERATOR CORPORATION AND MUST BE RETURNED UPON REQUEST.

DWG. TITLE:	SCHEMATIC - HEATER WIRING LB 40-60 (BREAKERS)	MODEL UNIT:	LB 40-60		ELECTRO-STEAM GENERATOR CORP. 50 INDEL AVENUE, RANCOCAS, NJ. 08073
		ENGINEER:	C.FERRARA	10-06-15	
CUSTOMER:	-	DRAWN BY:	C.FERRARA	10-06-15	DWG NO: - REV: A SCALE: N/A
		APPROVED:	B.WEIGLE	10-06-15	SHEET: 4 OF 4

ELECTRO-STEAM GENERATOR CORPORATION TERMS AND CONDITIONS OF SALE

EXCLUSIVE AND ENTIRE: The following Standard Terms and Conditions are intended by the parties to govern all the purchases of equipment, parts or service from Seller, and together with the specifications provided or embodied herewith, represent the entire understanding of the parties without exception. All other terms and conditions are specifically rejected, and by proceeding with the transaction in any manner, both Seller and Buyer agree that these Standard Terms and Conditions shall control. The price charged by Seller is based on these Standard Terms and Conditions.

DOMESTIC TERMS

TERMS: Net 30 days. A "late payment" in the form of interest at the rate of 2% per month or a service charge of like amount will be levied on all late payments (the type of charge being consistent with the applicable local law). Invoices will be submitted when the equipment, part, service is supplied. Attention to these terms will eliminate delays in starting up any equipment or providing further service or parts. NOTE: Terms pending credit approval.

INTERNATIONAL TERMS

TERMS: Advanced payment (wire transfer, credit card, or cash in advance) or confirmed letter of credit.

TAXES: No taxes of any kind are included. All prices herein and/or contracts shall be subject to increase without notice by the amount of present or future sales or excise tax levied or charged, either by Federal, State or any other assessing agency.

CHANGES: Changes made after fabrication has begun shall be submitted in writing, signed by Buyer. Buyer agrees to pay the cost of any changes. The specifications and prices are subject to change without notice.

CLAIMS: Title passes to the Buyer upon delivery to the carrier, unless otherwise indicated. Safe delivery is the responsibility of the carrier. Damaged merchandise, if accepted, should be noted on the delivery receipt and on the freight bill before acceptance of shipment. Make claim promptly.

LOCAL CODES: All steam boilers are built in accordance with ASME miniature boiler codes. NOTE: It is the responsibility of the installer to conform to any state or local codes. If further inspection following modifications by the installer is required under state and local codes it is the responsibility of the local installer.

SEVERABLE AND INDEPENDENT PROVISION: WITHOUT LIMITING THE FOREGOING, IT IS EXPRESSLY UNDERSTOOD AND AGREED THAT EACH AND EVERY PROVISION OF THIS AGREEMENT THAT PROVIDES FOR A LIMITATION OF LIABILITY, DISCLAIMER OF WARRANTIES, OR EXCLUSION OF DAMAGES IS INTENDED BY THE PARTIES TO BE SEVERABLE AND INDEPENDENT OF ANY OTHER PROVISION AND TO BE ENFORCED AS SUCH, FURTHER, IT IS EXPRESSLY UNDERSTOOD AND AGREED THAT IN THE EVENT ANY REMEDY HEREUNDER IS DETERMINED TO HAVE FAILED ITS ESSENTIAL PURPOSE, ALL OTHER LIMITATIONS OF LIABILITY AND EXCLUSION OF DAMAGES SET FORTH HEREIN SHALL REMAIN IN FULL FORCE AND EFFECT. ALL SUCH PROVISIONS SHALL SURVIVE THE TERMINATION OF THIS AGREEMENT. NO ACTION, REGARDLESS OF FORM, ARISING OUT OF THE TRANSACTIONS OF THIS AGREEMENT MAY BE BROUGHT BY BUYERMORE THAN ONE YEAR AFTER THE CAUSE OF ACTION HAS ACCRUED.

WARRANTY: Seller warrants that the equipment, service, software, repair or parts supplied shall conform to the description. In the event that any part or parts, excepting expendable items such as, but not limited to, coil liners, thermocouples, refractories and other similar consumable items, that fail due to defects in material or workmanship within the first twelve (12) months of startup of equipment or eighteen (18) months after shipment, whichever occurs first, or in the case of service, repairs, or parts, within twelve (12) months of supplying such service, repair or part, Seller shall at its option, repair or replace EXW (Ex works), such defective part or parts. If the equipment, service, repair or part included software, Seller warrants, for a period of twelve (12) months of startup or eighteen (18) months after shipment, whichever occurs first, that the software supplied or serviced will meet its published functional specifications. Should software fail to meet the specifications, or be otherwise defective, Seller shall promptly correct errors or non-conformities. If correction is not possible, Seller shall replace defective software, or, at Seller=s option, refund the purchase price paid for such software. The warranty obligations of Seller with respect to equipment not manufactured by Seller shall conform to and be limited to the warranty actually extended to Seller by its suppliers. Notice of a claim for alleged defective equipment must be given within fifteen (15) days after Buyer learns of the defect. The defective part or parts shall be returned to Seller, freight prepaid, unless otherwise directed by Seller. This warranty shall be exclusive and in lieu of any other warranties and Seller makes no warranty of merchantability or warranties of any other kind express or implied, including any implied warranty of fitness for a particular purpose which extend beyond the warranty as set forth above. Seller=s liability for any and all losses and damages to Buyer resulting from defective parts of equipment shall in no event exceed the cost of repair or replacement, EXW of defective parts or equipment. IN NO EVENT SHALL SELLER BE LIABLE FOR INCIDENTAL, SPECIAL OR CONSEQUENTIAL DAMAGES OF ANY KIND OR NATURE WHATSOEVER.

PATENT INDEMNITY: Seller agrees to indemnify Buyer against any proven claim and assessed liability for infringement of any United States patent arising from the manufacture or sale of any apparatus furnished by Seller to Purchaser. THE FOREGOING STATES SELLER'S ENTIRE LIABILITY FOR CLAIMS OR PATENT INFRINGEMENT. Seller shall have no liability whatsoever if the claim of infringement arises out of Seller's compliance with Purchaser's specifications. Seller shall have no liability whatsoever if a claim of infringement is based upon the Purchaser's use of the equipment as part of a patented combination where the other elements of the combination are not supplied by Seller, or in the practice of a patented process. Where the specifications, process, design are supplied by Purchaser, then Buyer agrees to indemnify Seller in like manner.

PROPRIETARY RIGHTS: Unless otherwise stated herein all design, manufacturing processes, manufacturing information, vendor sources, know-how, equipment, tooling or other hardware, software, or information (collectively referred to as "resources") acquired or utilized by the Seller to produce the finished goods, and any intellectual property rights, including but not limited to patents, copyrights and trade secrets related in any way to the resources, are and shall hereinafter remain the exclusive property of the Seller, regardless of whether such resources are created solely by the Seller, or by Buyer's collaboration with the Seller, for example, where Seller utilizes Buyer's specifications to create resources, and the Buyer shall acquire or receive no rights or title therein or thereto as a result of this purchase whether or not the order provides for Seller's delivery of technical data, drawings or other information to the Buyer in addition to the finished goods. Unless Seller's prior written consent is given, in no event shall the Buyer permit such data, drawings or information to be: (1) disclosed to any third party other than the Buyer's customer; (2) used by the Buyer or the Buyer's customer for manufacture of like or similar goods; (3) used for purposes of duplicating or reverse-engineering Seller's proprietary designs or processes; or (4) used by a party other than the Buyer or the Buyer's customer for any purpose.

LIMITATION OF LIABILITY: SELLER'S TOTAL AGGREGATE LIABILITY (ARISING OUT OF OR IN CONNECTION WITH BUT NOT LIMITED TO ANY BREACH OF CONTRACT, NEGLIGENCE, TORT, LIQUIDATED DAMAGES, SPECIFIC PERFORMANCE, TERMINATION, CANCELLATION INCLUDING THE REPAYING OF THE CONTRACT PRICE OR PARTS THEREOF, FUNDAMENTAL BREACH, BREACH OF WARRANTIES, MISREPRESENTATION, NONPERFORMANCE, NONPAYMENT, OR ANY OTHER) WHETHER BASED IN CONTRACT, IN TORT, IN EQUITY, ON STATUE, AT LAW OR ON ANY OTHER THEORY OF LAW, SHALL NOT EXCEED THE PAID CONTRACT PRICE. THE BUYERACKNOWLEDGES THAT THE REMEDIES PROVIDED IN THIS CONTRACT ARE EXCLUSIVE AND IN LIEU OF ALL OTHER REMEDIES AVAILABLE TO THE BUYERAT LAW, IN CONTRACT, IN TORT, IN STATUTE OR IN EQUITY OR IN ANY OTHER THEORY OF LAWS.

INSURANCE: Buyer represents that they have a program of Insurance which adequately protects their interest, and that of their employees and agents, including damage to plant, property and equipment, personal injury of any kind, directly or indirectly related in any way to the equipment, service, repair or parts supplied by Seller. Accordingly, Buyer waives any claim against Seller for the foregoing, and on behalf of its Insurance Company, any right of subrogation in connection therewith.

U.S. EXPORT CONTROLS: All items furnished by Seller to Buyer in connection herewith shall at all times be subject to the export control laws and regulations of the U.S. including, but not limited to, 10 CFR Part 810 and U.S. Export Administration Regulations. Buyer agrees and give assurance that no items, equipment, materials, service, technical data, technology, software or other technical information or assistance furnished by Seller, or any good or product resulting therefrom, shall be exported or re-exported by Buyer or its authorized transferees, if any, directly or indirectly, unless in accordance with applicable U.S. export laws and regulations. The aforesaid obligations shall survive any satisfaction, expiration, termination or discharge of any other contract obligations.

FREIGHT TERMS: F.O.B. Factory. Unloading and transportation to job site are at the Buyers expense.

INSTALLATION: No installation or job supervision charges are included.

RETURN OF MATERIAL: No goods will be accepted for return without a return authorization number from the factory. A 25% restocking fee is charged on returns, freight prepaid.

FORCE MAJEURE: If the performance of any part of this contract by Seller is rendered commercially impracticable by reason of any strike, fire, flood, accident, or any other contingency, the non-occurrence of which was a basic assumption of this contract including war, embargo, government regulation, or any unforeseen shutdown of major supply sources or other like causes beyond the control of Seller such as cannot be circumvented by reasonable diligence and without unusual expense, Seller shall be excused from such performance in whole or in part to the extent that it is prevented and for as long a period of time as these conditions render Seller's performance commercially impractical.

LAW: This Agreement shall be governed by the internal laws of the State of New Jersey, USA, and any claims arising hereunder shall be prosecuted in the US District Court having jurisdiction of causes arising in the District in which Seller is located. CISG (the Convention for the International Sale of Goods) is expressly rejected.

rev 01162015