Electro-Steam™
ESTABLISHED 1952

Portable Cleaner
LB-40(C) thru LB-60(C) (40-60kW)

User, Installation, & Maintenance Manual

Portable Cleaner Models - LB-40(C), LB-50(C), & LB-60(C)



IMPORTANT – READ ALL INSTRUCTIONS BEFORE OPERATING

NOTE: It is the responsibility of the installer to conform to any state or local codes. If further inspection following modifications by the installer is required under state and local codes, it is the responsibility of the local installer.

Electro-Steam™ Generator Corp.
50 Indel Avenue
Rancocas, NJ 08073

MADE IN USA

Phone: 609-288-9071
Toll Free: 800-634-8177
sales@electrosteam.com
rev. 06222020

Boiler Description & Safety Features

LITTLE BOY "LB-SERIES"

The Electro-Steam Generator design consists essentially of a high pressure chamber filled with water that is heated by one or more submerged resistance type electric heating elements. Automatic controls are provided to maintain the pre-set operating pressure and water level.

BOILER SAFETY FEATURES INCLUDE:

- Dual (UL-353) **Pressure Switches (#12)** with High Pressure Safety Reset.
- Automatic (UL-353) **Low Water Cut-Off (LLCO)** with Optional **Manual Low-Water Reset (MLWR) (#3)**
- Overpressure **Safety Relief Valve (#18)**
- **All LB Series steam generators are built by an ASME Certificate holder in accordance with the ASME Boiler and Pressure Vessel Code Section I – Rules for Construction of Power Boilers ("ASME BPVC Section I"). They also comply with the requirements outlined in The National Board Synopsis of Boiler and Pressure Vessel Laws, Rules and Regulations (NB-370) RULES FOR CONSTRUCTION AND STAMPING section, which for many jurisdictions include but are not limited to ASME BPVC Section I, ASME CSD-1, ASME B31.1, and REGISTRATION WITH THE NATIONAL BOARD.**

NOTE: It is the responsibility of the installer to conform to any state or local codes. If further inspection following modifications by the installer is required under state and local codes, it is the responsibility of the local installer.

- The following **WARNING Labels** have been placed on this boiler for **YOUR SAFETY**. Failure to observe these warnings could lead to **PROPERTY DAMAGE, SEVERE INJURY**, or **DEATH**:



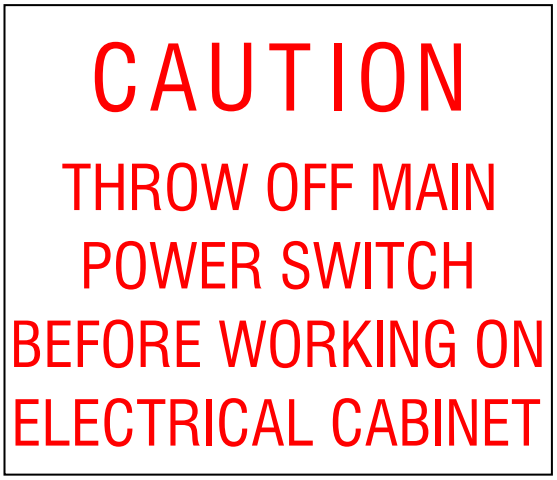



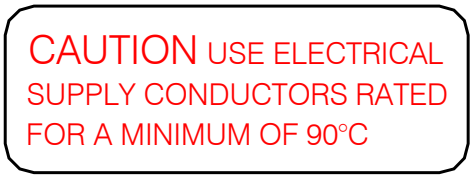

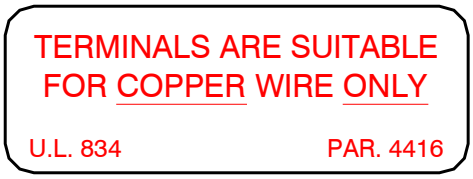



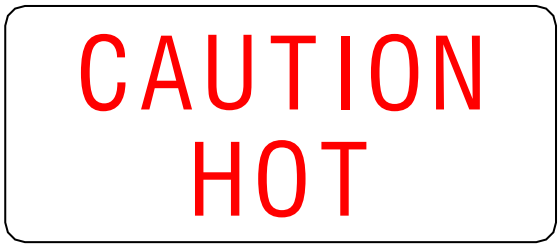

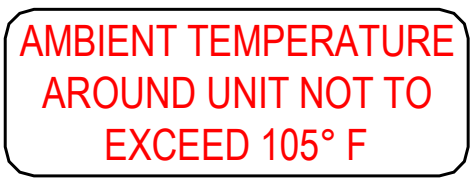

TABLE OF CONTENTS

1.) INSTALLATION INSTRUCTIONS **4-7**
1.1) STEAM GENERATOR (CLEANER) (PORTABLE) **4**
1.2) SOLUTION MIXER "OPTIONAL" **5-7**
2.) OPERATION & SEQUENCE OF EVENTS **8-9**
3.) CLEANING & MAINTENANCE **10-18**
3.1) MANUAL "BLOW DOWN" **10**
3.2) CLEANING WATER LEVEL PROBES **10-11**
3.3) CLEANING OR REPLACING HEATERS **11**
3.4) REPLACING GLASS GAUGE AND RUBBER WASHERS **12-13**
3.4.1) BRASS SIGHT GLASS (STANDARD) 12
3.4.1) BRASS SIGHT GLASS (SEISMIC) 13
3.5) CHAMBER CLEANING & CHEMICAL TREATMENT **14-15**
3.6) PRESSURE CONTROL DATA SHEET **16**
3.7) SETTING THE PRESSURE CONTROLS **17-18**
4.) CALCULATIONS & DATA SHEETS **19-21**
4.1) HEATER POWER & VOLTAGE RATINGS **19**
4.2) TOTAL POWER RATING CALCULATIONS **19**
4.3) AMPERAGE CALCULATIONS **20**
4.4) ACTUAL POWER RATING CALCULATIONS **21**
4.5) STEAM CAPACITY CALCULATIONS **21**
5.) DRAWINGS & WIRING SCHEMATICS **22-28**
5.1) PARTS LEGENDS **22-23**
5.1.1) LB 40-60 (CLEANER) (PORTABLE) 22
5.1.2) HEAVY DUTY GUN 23
5.2) INSTALLATION DATA SHEET **24**
5.3) CONTROL WIRING SCHEMATIC **25**
5.4) HEATER WIRING SCHEMATICS **26-28**
5.4.1) LB (40-80KW) (THREE PHASE) (208-240V) 26
5.4.2) LB (40-60KW) (THREE PHASE) (380-425V) 27
5.4.3) LB (40-60KW) (THREE PHASE) (440-600V) 28
6.) TERMS & CONDITIONS **29**

1.) INSTALLATION INSTRUCTIONS

LITTLE GIANT "LG-SERIES" (Cleaner) (Portable)

IMPORTANT – READ ALL INSTRUCTIONS BEFORE OPERATING

NOTE: For generator measurements, refer to Installation Data Drawing attached. For interpretation of numbered items, refer to Parts Legend Drawing attached. Ambient temperature around this unit must not exceed 105°F.

1.1) INSTALLATION INSTRUCTIONS: (CLEANER) (PORTABLE)

Set **STEAM GENERATOR** on level floor and attach **Solution Bucket (#25)** into the 2 predrilled holes on right side of generator.

CONNECTIONS:

Periodically check all plumbing and electrical connections for tightness; this should also be done before initial start-up.

ELECTRICAL:

This generator must be connected to a disconnect switch protected by fuses or a circuit breaker with the proper size wire by a licensed electrician in accordance with N.E.C. and your local codes – Voltage, KW, and Phase requirement are marked on the nameplate.

WATER SUPPLY:

Connect city water line to **Y-Strainer (#6)**.
Purity: NOT to exceed 26,000 OHMS per CM
Temperature Range: 32°F - 140°F or 0°C - 60°C.
Pressure Range: 20PSI - 150PSI.

***CAUTION:** The **Pump (#8)** requires clean tap water. If the water is not free of foreign matter, a 5 micron cartridge filter should be installed in the water supply line.

STEAM OUTLET:

Connect the **1/4" Union "Female End" (A)** on the **Steam Hose (I)** from the Steam Gun to the **Steam Outlet** (**1/4" Union "Male End") (#16)**.

SAFETY VALVE & DRAIN:

Route **Safety Valve (#18)** and **Manual Drain (#19)** separately towards the floor.

1.2) INSTALLATION INSTRUCTIONS - SOLUTION MIXER
HydroMinder Model 511 Parts Diagram/List "OPTIONAL"

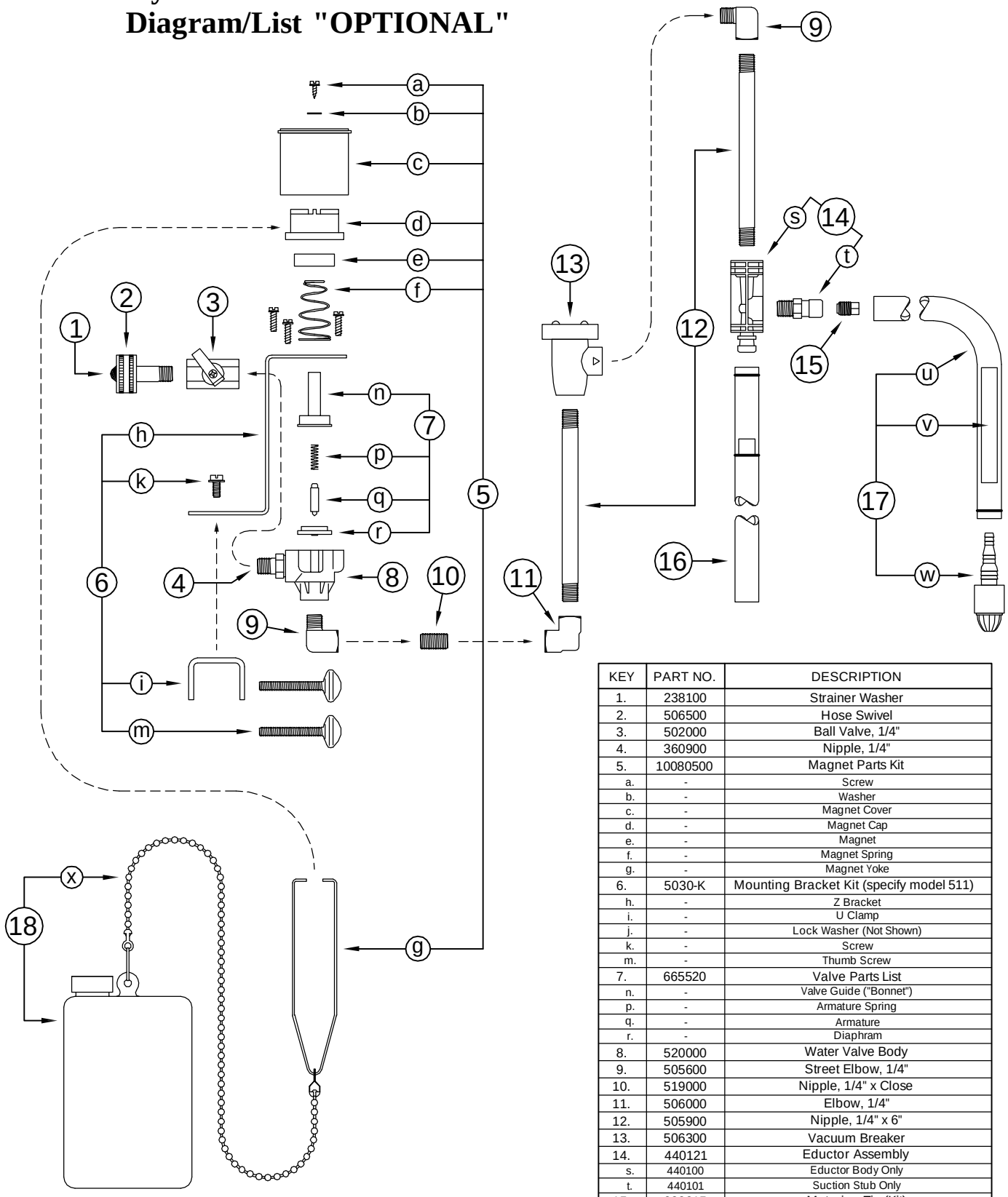

KEY	PART NO.	DESCRIPTION
1.	238100	Strainer Washer
2.	506500	Hose Swivel
3.	502000	Ball Valve, 1/4"
4.	360900	Nipple, 1/4"
5.	10080500	Magnet Parts Kit
a.	-	Screw
b.	-	Washer
c.	-	Magnet Cover
d.	-	Magnet Cap
e.	-	Magnet
f.	-	Magnet Spring
g.	-	Magnet Yoke
6.	5030-K	Mounting Bracket Kit (specify model 511)
h.	-	Z Bracket
i.	-	U Clamp
j.	-	Lock Washer (Not Shown)
k.	-	Screw
m.	-	Thumb Screw
7.	665520	Valve Parts List
n.	-	Valve Guide ("Bonnet")
p.	-	Armature Spring
q.	-	Armature
r.	-	Diaphram
8.	520000	Water Valve Body
9.	505600	Street Elbow, 1/4"
10.	519000	Nipple, 1/4" x Close
11.	506000	Elbow, 1/4"
12.	505900	Nipple, 1/4" x 6"
13.	506300	Vacuum Breaker
14.	440121	Eductor Assembly
s.	440100	Eductor Body Only
t.	440101	Suction Stub Only
15.	690015	Metering Tip (Kit)
16.	5057-A	Discharge Tube Assembly
17.	5058-9A	Suction Tube Assembly
u.	505809	Tubing, 1/2" x 9'
v.	250006	Ceramic Weight
w.	10076301	Foot Valve, Viton
-	250700	(Foot Valve & Weight)
18.	5043-A	Float & Chain Assembly
x.	507200	Bead Chain Only

Hydro Systems
3798 Round Bottom Road
Cincinnati, OH 45244

Phone: (513) 271-8800
Fax: (513) 271-0160
www.hydrosystemsco.com

1.2) INSTALLATION INSTRUCTIONS – SOLUTION MIXER "OPTIONAL" (Continued)

NOTE: Refer to "HydroMinder Model 511 Parts Diagram" on previous page for interpretation of numbered & lettered items. For interpretation of numbered items with "#", refer to Parts Legend Drawing attached. For better understanding of installation of Solution Mixer, refer to drawing on next page.

1. A **4' Red Hose** should be enclosed to attach the incoming water connection to the **Solution Mixer**. Attach tee end of hose to **Water Inlet (#6)**.

2. Remove the **2 Screws (6k)** holding **U-Clamp (6i)** and reverse **U-Clamp (6i)** to where **Thumbscrews (6m)** are on outside of **Solution Bucket (#25)**. This allows Solution Mixer to fit more vertical and **Magnet Yoke (5g)** moves more freely.

3. Attach **Solution Mixer** on side of **Solution Bucket (*25)** opposite the **Steam Out (*16)**. Tighten **Thumbscrews (6m)**.

4. Attach **Discharge Tube Assembly (16)** to bottom of **Eductor Body Only (14s)**. Push tight on flange.

5. Remove **Metering Tip (15)** of your choice from enclosed packet and hand screw into **Suction Stub Only (14t)**. (Green tip is suggested for initial start up. The **Solution Mixer** should be titrated, at end of gun, or wand, with valve fully open by chemical supplier. Larger or smaller **Metering Tips (15)** may be required to achieve proper working concentration.)

   NOTE: For better understanding of metering tip selection, refer to section **"Metering Tip Selection:"** in the **HydroMinder Model 511 Manual** enclosed with **Solution Mixer**.

6. Attach **Tubing 1/2" x 9' (17u)** to **Suction Stub Only (14t)**. Push tight on flange.

7. Place **Viton Foot Valve (17w)** into solution supply.

8. Thread **Bead Chain Only (18x)** through loop on **Magnetic Yoke (5g)**. Pull **Bead Chain (18x)** close so that **Float & Chain Assembly (18)** is suspended in **Solution Bucket (#25)**. If not suspended, **Solution Bucket (#25)** will never fill.

9. Attach the other end of the **4' Red Hose** to the **Hose Swivel (2)**.

10. Verify that the **Ball Valve (3)** is completely open.

11. **Solution Mixer** is now ready for use.

1.2) INSTALLATION INSTRUCTIONS - SOLUTION MIXER "OPTIONAL" (Continued)

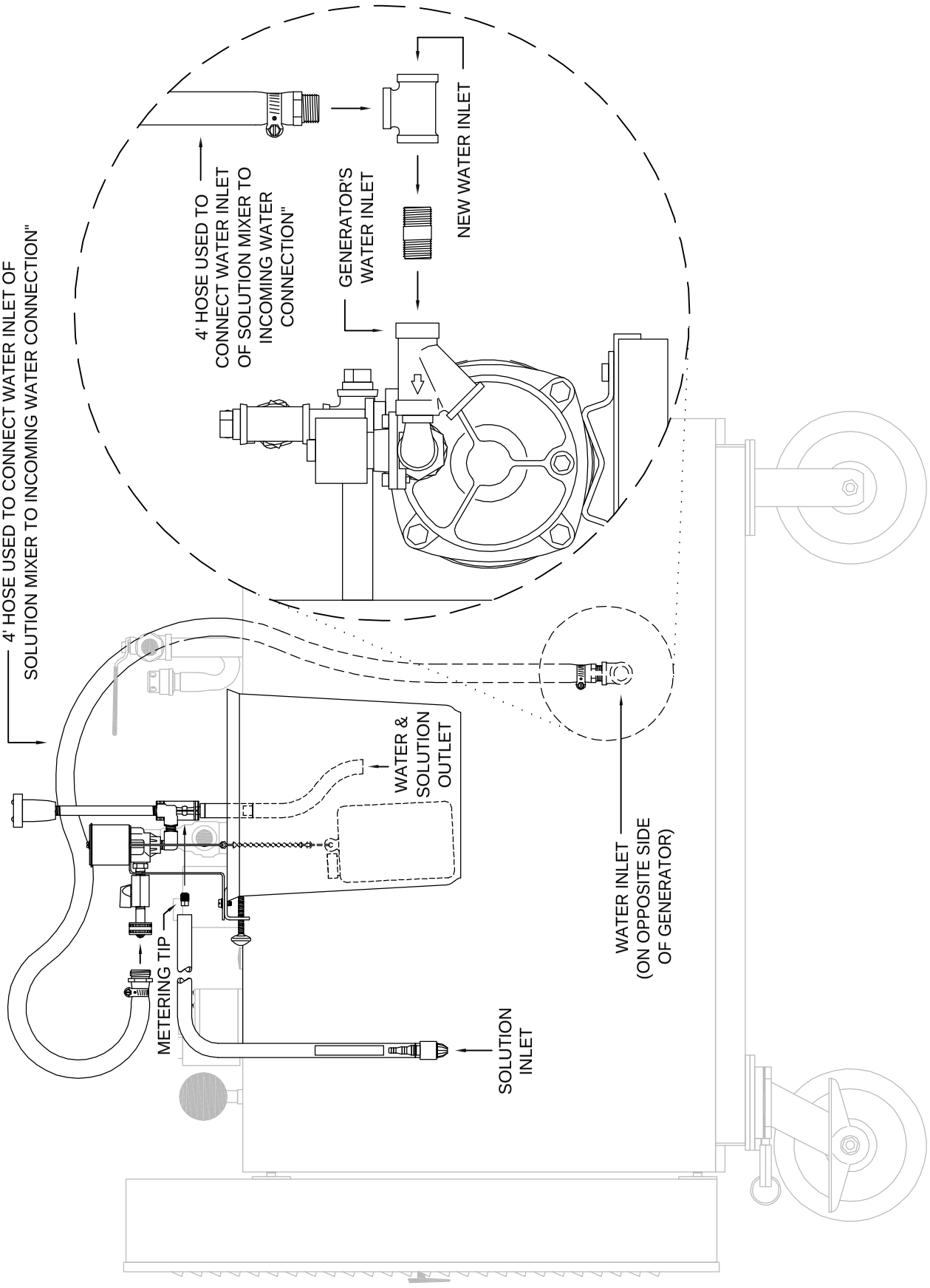

2.) OPERATION & SEQUENCE OF EVENTS

IMPORTANT – READ INSTALLATION INSTRUCTIONS BEFORE OPERATING

START UP:

1. Turn on water supply from the source to the generator.

2. **OPEN** all valves on generator except for the **Manual Drain (#19)**.

3. Place **Main Disconnect Box** in **ON** position and/or **Plug In**.

4. Hold in the **Lever Handle (D)** on the **Steam Gun**.

5. Place toggle **Switch (#2)** in **ON** position.

   - The **Water Solenoid (#7)** and **Pump (#8)** will engage and the chamber will begin to fill with water. As the water level rises, it will make contact with the **(G/D)** and **(A)** probes, indicating the heaters are safely submerged. At this time the contactor(s) will engage, supplying power to the heaters, causing steam pressure to accumulate.

   - The chamber will continue to fill with water until 1 second after the water makes contact with the **(C)** probe, causing the **Water Solenoid (#7)** and **Pump (#8)** to turn off.

   - If the contactor(s) still have not engaged at this time, you may need to press the **Safety Reset (#13)**. If your generator is required to have a **Manual Low-Water Reset (MLWR) (#3)**, it must be pushed it at this time to engage the contactor(s).

6. Once generator is full of water, release the **Lever Handle (D)** on the **Steam Gun**.

   - Steam pressure will continue to rise until is reaches **85 PSI**. At this time, the pressure control labeled "**Control**" will cause the contactor(s) to disengage. The pressure will drop approximately **5-8 PSI** until the "**Control**" causes the contactor(s) to reengage, causing the pressure to rise again. The contactor(s) will continue to cycle on and off during operation.

   NOTE: Just because generator is up to pressure does not necessarily mean it is up to temperature. When first starting generator, before using the gun for operation, you should use the gun to exhaust pressure, allowing the heaters to remain on longer, thus increasing the temperature inside the chamber and increasing its ability to recover from loss of steam.

   WARNING – Steam hose and gun will always be hot while generator is on, even when gun is not is use.

7. The generator is now fully operational and will produce steam until it is turned off.

2.) OPERATION & SEQUENCE OF EVENTS (Continued)

- As steam is exhausted, the water level will drop until 3 seconds after it breaks contact with the (C) probe. At this time, the **Water Solenoid (#7)** and **Pump (#8)** will engage and the chamber will again fill with water. The chamber will continue filling until 1 second after the water makes contact with the (C) probe. The **Water Solenoid (#7)** and **Pump (#8)** will continue to cycle on and off during operation.

NOTE: If at anytime the "**Control**" fails and the pressure exceeds **85 PSI**, the "**Safety**" will cause the contactor(s) to disengage at **90 PSI** and will not allow the contactor(s) to reengage until the **Safety Reset (#13)** is manually pushed. If this happens, the "**Control**" needs to be set lower or must be replaced. If the "**Control**" and "**Safety**" happen to fail, and the pressure reaches **100 PSI**, the **Safety Valve (#18)** will pop, releasing the pressurized steam. If this happens, all three components may need to be replaced.

STEAM GUN OPERATION:

NOTE: Refer to Steam Gun Parts Legend for interpretation of lettered items.

1. The special Siphon Heavy Duty Steam Gun is equipped with **Steam (I)** and **Detergent (J) Hoses** with valves for steam and detergent control.

2. The **Suction Strainer (B)** at the end of the detergent hose should be placed in the **Solution Bucket (#25)**. Chemicals should be mixed in the bucket in proportions as recommended by chemical supplier. (Solution Mixer "Optional")

3. Steam flow is obtained by pressing on the **Lever Handle (D)** located directly in front of the handle. A mixture of steam and detergent is obtained by regulating the small **Detergent Valve (H)** while operating the **Lever Handle (D)**.

SHUT DOWN:

4. To shut off generator, place **Toggle Switch (#2)** and **Main Disconnect Box** in **OFF** position and/or **unplug** the machine. Pressure will drop naturally as the generator cools, or generator may be drained manually through **Manual Drain (#19)**. (See Manual Blow Down 3.1)

WARNING – HOT WATER and **STEAM** under **HIGH PRESSURE** can lift drain pipes right off the ground and cause **SERIOUS INJURY**. Make sure drain pipe is **SECURE** and **CANNOT** move. The drain must be directed into a **HIGH TEMPERATURE** drain (**NO PVC**).

3.) CLEANING & MAINTENANCE

The following cleaning procedures are **HIGHLY RECOMMENDED** in order to keep your Steam Generator in the best operating condition at all times.

3.1) MANUAL "BLOW DOWN"

A Manual "Blow Down" is an easy way to **GREATLY** extend the life of your Steam Generator. The following is the **LEAST** amount of times recommended to blow down your generator:

NORMAL WATER AREAS – Should be done **ONCE A WEEK**.
BAD WATER AREAS – Should be done **ONCE A DAY**.

NOTE: The best time to Blow Down your generator is after it has been running for some time, while it is still hot.

1. Place **Toggle Switch (#2)** and **Main Disconnect Box** in **OFF** position and/or unplug the machine.
2. Allow pressure to drop between **10** and **20 PSI**.
3. Open **Manual Drain (#19)** slowly, allowing **HOT WATER** and **STEAM** to blow out into the drain, cleaning out the generator.

NOTE: Blow Down your generator at any pressure you feel comfortable with. **10** to **20 PSI** is only a recommendation. You may go higher or lower, but higher is always better.

WARNING – **HOT WATER** and **STEAM** under **HIGH PRESSURE** can lift drain pipes right off the ground and cause **SERIOUS INJURY**. Make sure drain pipe is **SECURE** and **CANNOT** move. The drain must be directed into a **HIGH TEMPERATURE** drain (**NO PVC**) or outside.

3.2) CLEANING WATER LEVEL PROBES

Water Level Probes are the heart of your generator. Almost all steam generator malfunctions are caused by dirty water level probes. **CLEANING** your **PROBES** is by far the **MOST IMPORTANT** maintenance step to keep your generator running properly. The following is the **LEAST** amount of times recommended to clean your probes:

NORMAL WATER AREAS – Should be done **TWICE A YEAR**.
BAD WATER AREAS – Should be done **3-4 TIMES A YEAR**.

NOTE: The best time to clean your probes is before you turn your generator on, while it is still cool.

1. Place **Toggle Switch (#2)** and **Main Disconnect Box** in **OFF** position and/or **unplug** the machine.
2. Make sure generator is cool and the **Pressure Gauge (#15)** reads **0 PSI.**
3. Locate the blue box on top of generator and remove cover plate, exposing the **Water Level Probes (#5)**.
4. Use **5/16" Socket** to remove wires from probes.
5. Use **13/16" Spark Plug Socket** to remove probes from chamber.

3.2) CLEANING WATER LEVEL PROBES (Continued)

6. Clean probes to remove rust and scaling.

   NOTE: To clean probes you may use wire wheel, wire brush, steal wool, or Scotch-Brite. (Wire wheel works the best) You may also want to try some sort of chemical like CLR remover or LIME-A-WAY.

7. Reinstall probes assuring each probe's length is assigned to its proper letter.
8. Reconnect wires to probes assuring each color is also assigned to its proper letter.

   NOTE: DO NOT make wires too tight. Just tighten enough to make contact. Over tightening can cause probe plugs to pull apart over time.

9. Reinstall cover plate.

Water Level Probe Specifications:

Letter Assignment on Chamber	A	B	C	D/G
Water Level Probe Length	15"	15 3/8"	13"	15 3/8"
Wire Color Assignment	RED	Not Used	BLACK	GREEN
Assignment on Dual Function Board	LLCO	Not Used	H	G

NOTE: The (B) Probe is not used. It is a spare probe that can be cut and used to replace any one of the other probes.

WARNING – There **MUST be NO PRESSURE** in the chamber when removing probes. If you must change probes while chamber is **HOT**, make sure the steam out and drain valves are open to assure chamber will remain depressurized. **DO NOT** touch probes with your bare hands while **HOT**, and be cautious of escaping steam from probe holes while probes are removed.

3.3) CLEANING OR REPLACING HEATERS

Heaters are located inside the control panel (#1) below the insulation barrier, bolted into the chamber. If (3.5) Chamber Chemical/Acid Treatments are not regularly done, heaters must be taken out at least **ONCE A YEAR**, cleaned with wire brush and reinstalled using a new gasket. If you are replacing or cleaning your heater elements:

1. Place **Toggle Switch (#2)** and **Main Disconnect Box** in **OFF** position and/or **unplu**g.
2. Make sure generator is cool and the **Pressure Gauge (#15)** reads 0 PSI.
3. Remove heater wires from heater(s), using a **3/8" Socket**.
4. Unbolt and remove heater(s) using a **1 1/16" Socket**.

   NOTE: Heater(s) may be difficult to get out; you may need to use some sort of pry bar to get them loose.

5. Clean heater(s) with wire brush. If replacing, dispose of old heater(s).
6. Reinstall heater(s) with new gasket(s).
7. Attach heater wires assuring proper wiring. *Refer to Heater Wiring Schematics attached*

NOTE: If you are replacing a heater because of a heater failure, you must also clean the probes and clean out the chamber, or you may have another heater failure within 48 hours.

3.4) REPLACING GLASS GAUGE & RUBBER WASHERS OR GLASS PACKINGS

The **Sight Glass (#10)** gives the operator the ability to easily monitor the actual water level inside the chamber. If the **Sight Glass (#10)** gets clogged or is no longer functional, it can be very difficult to troubleshoot a problem.

3.4.1) BRASS SIGHT GLASS (STANDARD)

GLASS GAUGE and **RUBBER WASHERS MUST** be replaced **EVERY SIX MONTHS**

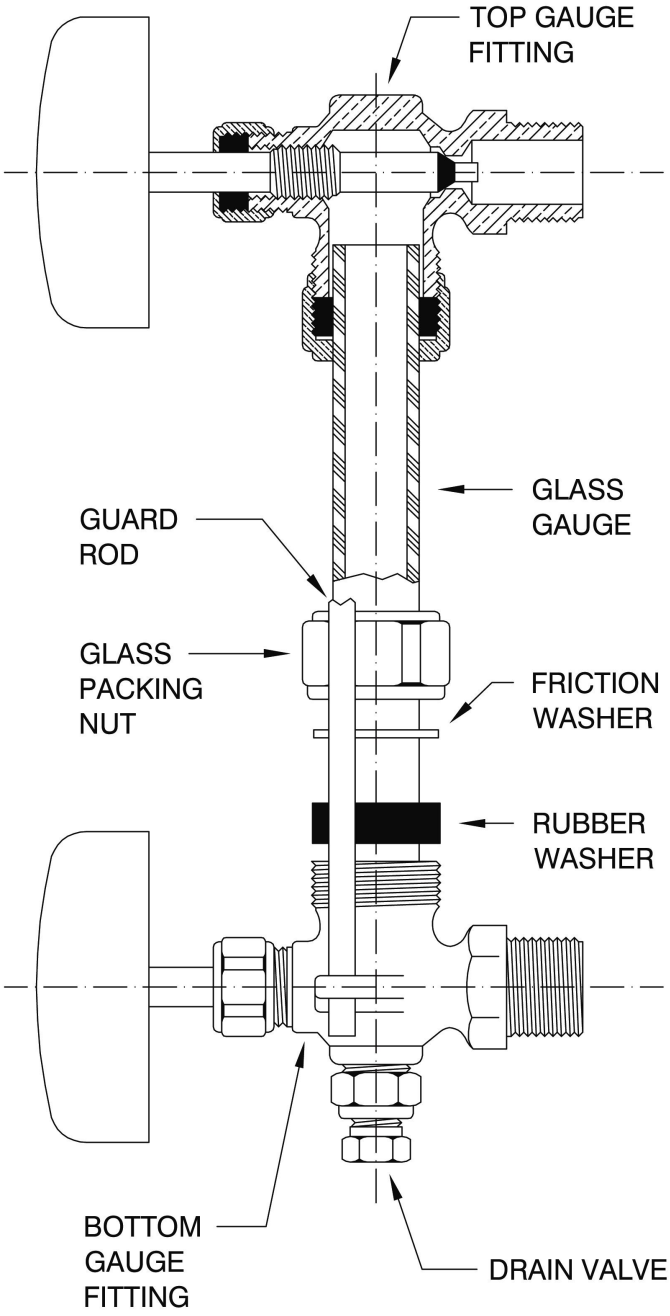

INSTALLATION:

Only properly trained personnel should install and maintain water gauge glass and connections. Remember to wear safety gloves and glasses during installation. Before installing, make sure all parts are free of chips and debris.

1. Uninstall **GUARD RODS**, **GLASS GAUGE**, and **RUBBER WASHERS**. (You may need to rotate one of the **GAUGE FITTINGS** to remove **GLASS GAUGE**)
2. Slip a new **RUBBER WASHER** on the new **GLASS GAUGE** about an inch from the bottom.
3. Now slip the following items through the top of **GLASS GAUGE** in the following order:
   - **FRICTION WASHER**
   - **GLASS PACKING NUT** (facing down)
   - **GLASS PACKING NUT** (facing up)
   - **FRICTION WASHER**
   - **RUBBER WASHER** (inch down from top)
4. Gently insert **GLASS GAUGE** into **GAUGE FITTINGS**. You may need to rotate **GAUGE FITTINGS** until vertically aligned, after **GLASS GAUGE** is in.
5. Carefully raise **GLASS GAUGE** about 1/16” from bottom and slide lower **RUBBER WASHER** down until it makes contact with the **BOTTOM GAUGE FITTING**. (**DO NOT** allow **GLASS GAUGE** to remain in contact with any metal)
6. Carefully slide upper **RUBBER WASHER** up as far as possible.
7. Hand tighten both **GLASS PACKING NUTS**, then tighten 1/2 turn more by wrench. Tighten only enough to prevent leakage. **DO NOT OVER TIGHTEN!** If any leakage should occur, tighten slightly, a quarter turn at a time, checking for leakage after each turn.
8. Reinstall **GUARD RODS**.

3.4) REPLACING GLASS GAUGE & RUBBER WASHERS OR GLASS PACKINGS (Continued)

The **Sight Glass (#10)** gives the operator the ability to easily monitor the actual water level inside the chamber. If the **Sight Glass (#10)** gets clogged or is no longer functional, it can be very difficult to troubleshoot a problem.

3.4.2) BRASS SIGHT GLASS (SEISMIC)

GLASS GAUGE and **GLASS PACKINGS MUST** be replaced **EVERY SIX MONTHS**

The Seismic Sight Glass is equipped with **BALL CHECKS** in each **GAUGE FITTING**.

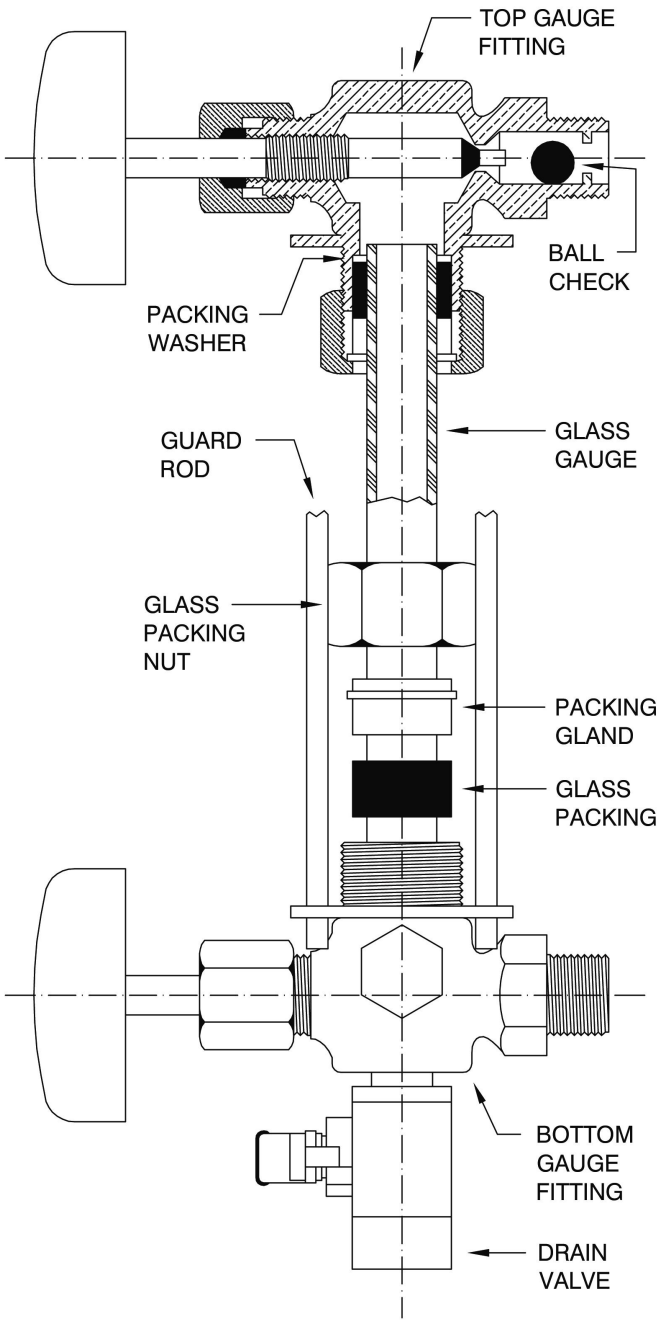

INSTALLATION:

Only properly trained personnel should install and maintain water gauge glass and connections. Remember to wear safety gloves and glasses during installation. Before installing, make sure all parts are free of chips and debris.

1. Uninstall **GUARD RODS**, **GLASS GAUGE**, and **GLASS PACKINGS**. (You may need to rotate one of the **GAUGE FITTINGS** to remove **GLASS GAUGE**)
2. Slip a new **GLASS PACKINGS** on the new **GLASS GAUGE** about an inch from the bottom.
3. Now slip the following items through the top of **GLASS GAUGE** in the following order:
   - **PACKING GLAND** (facing down)
   - **GLASS PACKING NUT** (facing down)
   - **GLASS PACKING NUT** (facing up)
   - **PACKING GLAND** (facing up)
   - **GLASS PACKINGS** (inch down from top)
   - **PACKING WASHER**
4. Gently insert **GLASS GAUGE** into **GAUGE FITTINGS**. You may need to rotate **GAUGE FITTINGS** until vertically aligned, after **GLASS GAUGE** is in.
5. Carefully raise **GLASS GAUGE** about 1/16” from bottom and slide lower **GLASS PACKINGS** down until it makes contact with the **BOTTOM GAUGE FITTING**. (**DO NOT** allow **GLASS GAUGE** to remain in contact with any metal)
6. Carefully slide upper **GLASS PACKINGS** up as far as possible.
7. Hand tighten both **GLASS PACKING NUTS**, then tighten 1/2 turn more by wrench. Tighten only enough to prevent leakage. **DO NOT OVER TIGHTEN!** If any leakage should occur, tighten slightly, a quarter turn at a time, checking for leakage after each turn.
8. Reinstall **GUARD RODS**.

3.5) CHAMBER CHEMICAL/ACID TREATMENT

All Electric Steam Generator should be cleaned regularly. The following is the least amount of times recommended to clean out your chamber:

NORMAL WATER AREAS – Should be done **ONCE A YEAR**.
BAD WATER AREAS – Should be done **TWICE A YEAR**.

Chamber Treatment Instructions:

1. Turn on generator, allowing pressure to climb to **10** to **20 PSI** on **Pressure Gauge (#15)**, and then shut off.

2. **"Blow Down"** Open **Manual Drain (#19)** slowly, allowing **HOT WATER** and **STEAM** to blow out into the drain.

NOTE: You may Blow Down your generator at any pressure you feel comfortable with. **10** to **20 PSI** is only a recommendation. You may go higher or lower, but higher is always better.

WARNING – **HOT WATER** and **STEAM** under **HIGH PRESSURE** can lift drain pipes right off the ground and cause **SERIOUS INJURY**. Make sure drain pipe is **SECURE** and **CANNOT** move. The drain must be directed into a **HIGH TEMPERATURE** drain **(NO PVC).**

3. Remove **Safety Valve (#18)**.

WARNING – There **MUST** be **NO PRESSURE** in the chamber when removing the **Safety Valve (#18)**, make sure the steam out and drain are open to assure chamber will remain depressurized. Be cautious of escaping steam from chamber while **Safety Valve (#18)** is removed.

4. Close **Manual Drain (#19)** and **Steam Out (#16)**; turn generator on until **Sight Glass (#10)** shows that it is 1/2 full, and then shut off.

5. Insert funnel into coupling, where **Safety Valve (#18)** used to be.

6. Pour **1 Gallon** of hydrochloric acid (inhibited) solution **(NON-FOOD APPLICATIONS)** into funnel very slowly, being careful of fumes and venting while pouring.

NOTE: Solution can be obtained from any industrial chemical dealer.
FOR FOOD APPLICATIONS: Use FDA approved chemicals.

7. Remove funnel, reinstall **Safety Valve (#18)**, and verify **Steam Out (#16)** is closed; let solution set in generator for **1 HOUR.**

8. Turn on generator, allowing pressure to climb to **5 PSI** on **Pressure Gauge (#15)**, and then shut off.

3.5) CHAMBER CHEMICAL/ACID TREATMENT (Continued)

9. Allow the pressure to drop to **0 PSI** on **Pressure Gauge (#15)** naturally. **DO NOT** open **Steam Out (#16)** or **Manual Drain (#19)** until pressure is down.

10. Remove **Safety Valve (#18)**.

11. Reinsert funnel, and fill generator completely to the top with clean water; let stand for an additional **1/2 HOUR**.

    NOTE: Turning on the generator will not completely fill it to the top. Filling must be done manually through the safety valve coupling.

12. Open **Manual Drain (#19)** to drain generator.

13. Close **Manual Drain (#19)**; refill generator completely to the top with clean water and open **Manual Drain (#19)** to flush out generator **completely**.

14. Reinstall **Safety Valve (#18)** and close **Manual Drain (#19)**.

15. Turn on generator, allowing pressure to climb to **10** to **20 PSI** on **Pressure Gauge (#15)**, and then shut off.

16. **"Blow Down"** Open **Manual Drain (#19)** slowly, allowing **HOT WATER** and **STEAM** to blow out into the drain.

    NOTE: You may Blow Down your generator at any pressure you feel comfortable with. 10 to 20 PSI is only a recommendation. You may go higher or lower, but higher is always better.

    WARNING – HOT WATER and **STEAM** under **HIGH PRESSURE** can lift drain pipes right off the ground and cause **SERIOUS INJURY**. Make sure drain pipe is **SECURE** and **CANNOT** move. The drain must be directed into a **HIGH TEMPERATURE** drain **(NO PVC).**

17. Your generator is now **ready for normal use and operation**.

3.6) PRESSURE CONTROL DATA SHEET

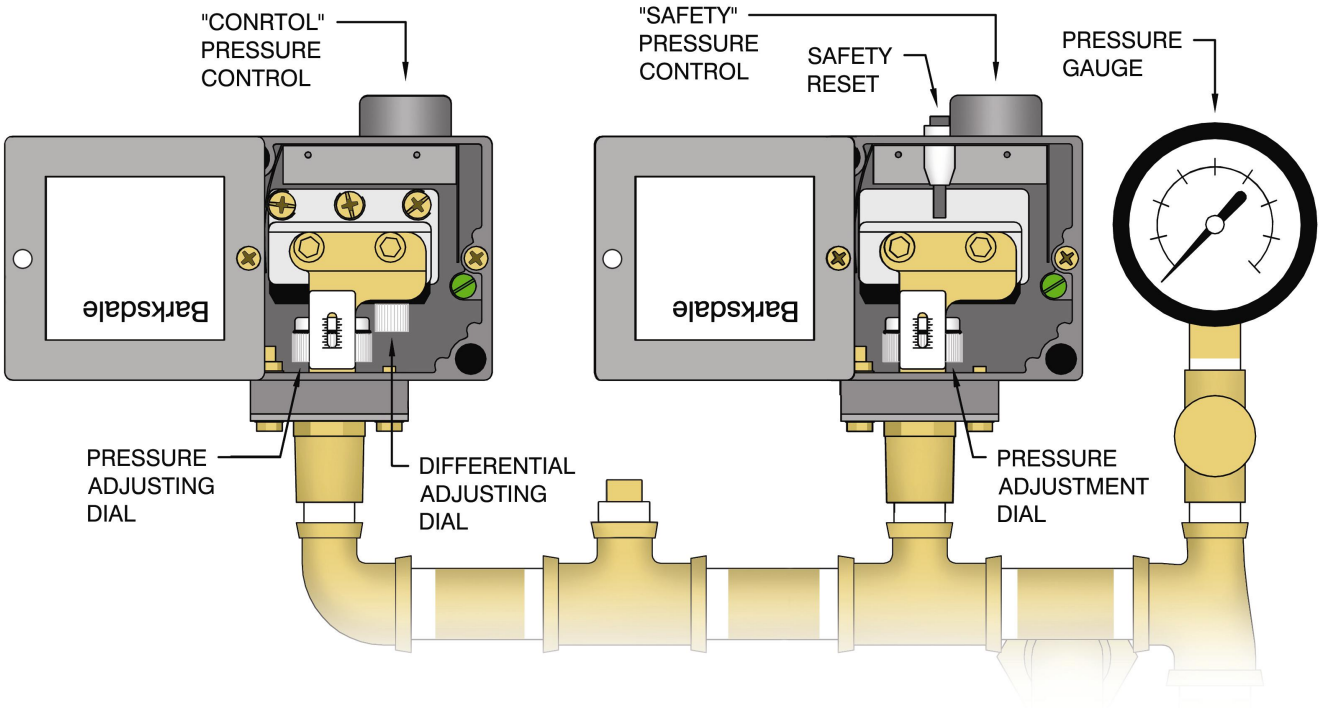

DEFINITIONS:

"CONTROL" PRESSURE CONTROL – This pressure control should be the only one controlling the operating pressure of the generator.

"SAFETY" PRESSURE CONTROL – This pressure control is only used if the "Control" fails. It is always set higher than the "Control"; if the operating pressure is passed, The "Safety" will turn the heaters off.

SAFETY RESET – This reset is tripped when the "Safety" turns the heaters off. It must be manually pushed to turn the heaters back on. This lets the user know there was a problem. If it is tripped, the "Control" most likely failed.

PRESSURE ADJUSTING DIAL – These dials adjust the set pressure at which each pressure control will turn the heaters off.

DIFFERENTIAL ADJUSTING DIAL – This dial is only on the "Control". When the "Control" turns the heaters off, the amount of pressure that is dropped before it turns the heaters back on (the differential) can be adjusted by this dial**.** This dial should never have to be adjusted, unless desired.

PRESSURE GAUGE – This tells the user what pressure is in the chamber. The pressure controls are set to this gauge.

3.7) SETTING THE PRESSURE CONTROLS

WARNING – **DO NOT ALTER** the original **FACTORY PRESSURE SETTINGS** of the **Pressure Switches** without contacting Electro-Steam Generator Corp. Every boiler is designed to produce a specific flow rate of steam at a set pressure. Altering the factory pressure settings will affect the performance of the machine, which may Hinder your process, **CAUSE DAMAGE** and potentially **VOID ANY WARRANTIES**.

WARNING – Contact Electro-Steam Generator Corp, **BEFORE** attempting to adjust the **Pressure Switches**. The Pressure switches should only be adjusted if one has been replaced or if the set points have drifted from their original factory set points.

WARNING – The **Pressure Switches** must be set while all circuits are live. **TO AVOID ELECTRICAL SHOCK, DO NOT TOUCH** the wires or the terminals in which they connect while setting the **Pressure Switches**.

NOTES:

- Setting the pressure controls greatly relies on your ability to tell whether the contactor(s) are turning the heaters on or off. You should be able to hear the contactor(s), located inside the **Electrical Box (#1)**, click on and off. Familiarize yourself with this sound.
- The order in which the pressure controls must be set is the "Safety" and then the "Control".
- In order to set the "Safety" you must keep the "Control" at a higher pressure setting than the Safety"
- Once the "Safety" is set, then you can lower the "Control" to its correct setting.
- To **INCREASE** the pressure setting, when looking down on pressure control, using your two index fingers, turn the **PRESSURE ADJUSTMENT DIAL CLOCKWISE**, causing the **BLACK INDICATOR LINE** to move **DOWN** the scale.
- To **DECREASE** the pressure setting, turn the dial **COUNTER CLOCKWISE**, causing the indicator line to move **UP** the scale.

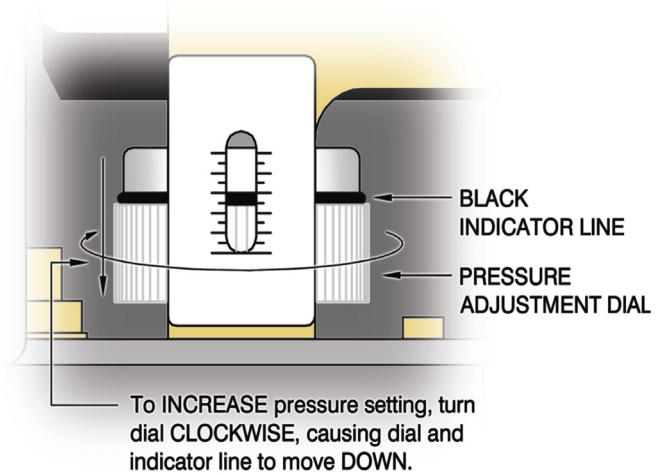

SETTING INSTRUCTIONS:

1. Open the pressure control covers, as shown on previous page.
2. Adjust the **PRESSURE ADJUSTMENT DIAL** on the "**CONTROL**" so that the **BLACK INDICATOR LINE** is somewhere between ½ and ¾ of the way down from the top.
3. Adjust the **PRESSURE ADJUSTMENT DIAL** on the "**SAFETY**" so that the **BLACK INDICATOR LINE** is somewhere between ¼ and ½ of the way down from the top.
4. Close the **Steam Out (#16)** and turn on generator. When the contactor(s) click on, the pressure will rise. If contactor(s) do not click on right away, you may need to press **SAFETY RESET**. Continue to watch the **Pressure Gauge (#15)** until you hear the contactor(s) click off. This may take up to 20 minutes.

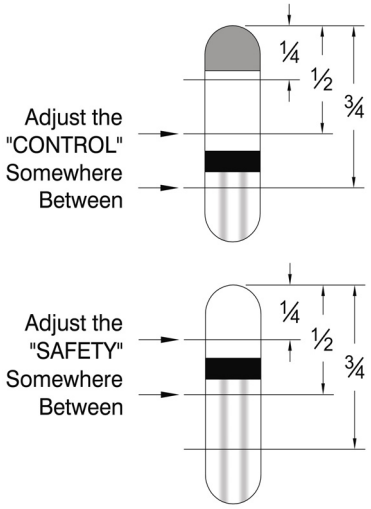

3.7) SETTING THE PRESSURE CONTROLS (Continued)

WARNING – DO NOT allow the pressure to reach **100 PSI**, the rating on the **Safety Valve (#18)**. If contactor(s) do not turn off before **95 PSI**, manually shut off generator, open the **Steam Out (#16),** and **DECREASE** the pressure setting on the "**SAFETY**" pressure control. Repeat step #4.

5. At this point the contactor(s) should be clicked off and you should be able to click them on and then off again by pressing the **SAFETY RESET**. This is a way to test if the "**SAFETY**" is still controlling the pressure, and not the **"CONTROL"**. While setting the "**SAFETY**" and the contactor(s) are off, if the **SAFETY RESET** does not cause the contactor(s) to click on and off again, **INCREASE** the setting on the "**CONTROL**"

WARNING – **DO NOT** allow the pressure to exceed **100 PSI**. If contactor(s) do not turn off before **95 PSI**, manually shut off generator, open the **Steam Out (#16)**, and **DECREASE** the pressure setting on the "**SAFETY**" pressure control. If you cannot get the "**SAFETY**" to control the pressure, it may need to be replaced.

Pressure Control Settings		
	"Control"	**"Safety"**
Cleaner (0-100 PSI)	**85 PSI**	**90 PSI**

6. Open the **Steam Out (#16)** to exhaust some pressure. Continue pressing the **SAFETY RESET** until the contactor(s) click on and remain on. The pressure should eventually begin to rise. If it doesn't, throttle the **Steam Out (#16)** somewhere between closed and open until it does.

7. Pay attention to what the pressure reads when the contactor(s) click off. If the pressure stopped **BELOW 90 PSI**, then **INCREASE** the pressure setting on the "**SAFETY"**. If the pressure stopped **ABOVE 90 PSI,** then **DECREASE** the pressure setting.

8. Continue to watch the pressure go up and down, while adjusting the "**SAFETY**" and pressing the **SAFETY RESET**, until the pressure stops at **90 PSI**.

9. At this point the "**SAFETY**" should be set at **90 PSI**, and the "**CONTROL**" should be set somewhere above **90 PSI.**

10. Let the pressure drop below **85 PSI** and then press the **SAFETY RESET**, so that the contactor(s) click on. **DECREASE** the pressure setting on the "**CONTROL**" until the contactor(s) click off.

11. Repeat Step 10 until you no longer need to press the **SAFETY RESET** for the contactor(s) to click on.

12. Continue to watch the pressure go up and down, while adjusting the "**CONTROL**", until the pressure stops at **85 PSI**.

13. The Pressure Controls are now set.

NOTE: If at anytime the **SAFETY RESET** needs to be pressed after the pressure controls are set, either one of the controls are bad, the "**SAFETY**" is set too low, or the "**CONTROL**" is set too high.

4.) CALCULATIONS AND DATA SHEETS

4.1) HEATER POWER & VOLTAGE RATINGS

LB 40-60 Model units use **2 Heaters** to meet the required **(KW) POWER** from the customer's specified **INPUT VOLTAGE**. Each heater comes in **3** different **(KW) POWER RATINGS** and **4** different **VOLTAGE RATINGS**.

NOTE: SINGLE PHASE is **NOT** usually **OFFERED** for **40KW+** generators, because of the extra cost to run and build with the higher amp draw requirements. Although not offered, in some special cases single phase 40KW+ generators can be made.

AVAILABLE HEATER RATINGS				
KW	**VOLTAGES**			
20	208	230	480	600
25	208	230	480	600
30	208	230	480	600

POWER RATINGS per MODEL		
MODEL UNIT	**QUAN.**	**KW**
LB-40	2	20
LB-50	2	25
LB-60	2	30

HEATER VOLTAGE RATINGS per INPUT VOLTAGE (VOLTS)														
Input Voltage	**208**	**220**	**230**	**240**	**380**	**400**	**415**	**425**	**440**	**460**	**480**	**550**	**575**	**600**
LB-40	208	230	230	230	208	240	240	240	480	480	480	600	600	600
LB-50	208	230	230	230	208	230	230	230	480	480	480	600	600	600
LB-60	208	230	230	230	208	230	230	230	480	480	480	600	600	600

NOTE: 380-425V heaters are not usually rated for 380-425V. They are usually 208-240V heaters that have been re-stamped 380-425V and jumpered in series.

4.2) TOTAL POWER RATING CALCULATIONS

The **HEATER POWER RATING** and **NUMBER OF HEATERS** are used to calculate the **TOTAL POWER RATING**. Since the **HEATER POWER RATINGS** are in Kilowatts, they must be multiplied by 1000 to convert them to Watts.

$$P_T = P_H x_H$$

DEFINITIONS:

P_T = Total Power Rating

P_H = Heater Power Rating

x_H = Number of Heaters

MODEL UNIT	LB-40	LB-50	LB-60
Heater Power Rating (Watts)	20,000	25,000	30,000
X Number of Heaters	2	2	2
Total Power Rating (Watts)	40,000	50,000	60,000

4.3) AMPERAGE CALCULATIONS

The **INPUT VOLTAGE, PHASE, TOTAL POWER RATING,** and **HEATER VOLTAGE RATING** are used to calculate the amperage.

NOTE: 380-425V heaters are not usually rated for 380-425V. They are usually 208-240V heaters that have been re-stamped 380-425V and jumpered in series.

FORMULAS TO CALCULATE 3 PHASE AMPERAGE	
208-240V & 440-600V	**380-415V (using 208-240V heaters)**
$I = \frac{P_T V_I}{V_H^2 \sqrt{3}}$	$I = \frac{P_T V_I}{(\sqrt{3} V_H)^2 \sqrt{3}}$

DEFINITIONS:

I = Amperage **V_I = Input Voltage**

P_T = Total Power Rating **V_H = Heater Voltage Rating**

THREE PHASE AMP DRAW CALCULATIONS (AMPS)														
Input Voltage	**208**	**220**	**230**	**240**	**380**	**400**	**415**	**425**	**440**	**460**	**480**	**550**	**575**	**600**
LB-40	111	96	100	105	67.6	58.2	60.4	61.8	44.1	46.1	48.1	35.3	36.9	38.5
LB-50	139	120	126	131	84.5	72.8	75.5	77.3	55.1	57.6	60.1	44.1	46.1	48.1
LB-60	167	144	151	157	101	87.3	90.6	92.8	66.2	69.2	72.2	52.9	55.3	57.7

4.4) ACTUAL POWER RATING CALCULATIONS

Because the **HEATER VOLTAGE RATINGS** only come in 4 different voltages, and there are so many different voltages in the field, the **TOTAL POWER RATING** is only completely accurate if the **VOLTAGE IN** is exactly equal to the **HEATER VOLTAGE RATING**. This means, in most cases, the **TOTAL POWER RATING** is not completely accurate. The **AMERAGE** and **INPUT VOLTAGE** can be used to calculate the **ACTUAL POWER RATING**.

4.4) ACTUAL POWER RATING CALCULATIONS (Continued)

FORMULAS TO CALCULATE ACTUAL POWER RATINGS	
THREE PHASE	**SINGLE PHASE**
$P_A = I\ V_I \sqrt{3}$	$P_A = I\ V_I$

DEFINITIONS:

I = Amperage

P_A = Actual Power Rating

V_I = Input Voltage

ACTUAL POWER RATING CALCULATIONS (KW)														
Input Voltage	**208**	**220**	**230**	**240**	**380**	**400**	**415**	**425**	**440**	**460**	**480**	**550**	**575**	**600**
LB-40	40	36.6	40	43.6	44.5	40.3	43.4	45.5	33.6	36.7	40	33.6	36.7	40
LB-50	50	45.7	50	54.4	55.6	50.4	54.3	56.9	42	45.9	50	42	45.9	50
LB-60	60	54.9	60	65.3	66.8	60.5	65.1	68.3	50.4	55.1	60	50.4	55.1	60

4.5) STEAM CAPACITY CALCULATIONS

Steam Capacity Calculations are based on the impossible feed water temperature of 212°F.

WARNING – Anything above 140°F will cause damage to water solenoid and pump.

NET STEAM CAPACITY CALCULATIONS				
MODEL UNIT	Feed Water @ **212°F**	Feed Water @ **140°F**, 90% of 212°F	Feed Water @ **100°F**, 80% of 212°F	Feed Water @ **60°F**, 75% of 212°F
LB-40	**138.0** LB/hr **62.6** Kg/hr	**124.2** LB/hr **56.3** Kg/hr	**110.4** LB/hr **50.1** Kg/hr	**103.5** LB/hr **47.0** Kg/hr
LB-50	**173.0** LB/hr **78.5** Kg/hr	**155.7** LB/hr **70.6** Kg/hr	**138.4** LB/hr **62.8** Kg/hr	**129.8** LB/hr **58.9** Kg/hr
LB-60	**207.0** LB/hr **93.9** Kg/hr	**186.3** LB/hr **84.5** Kg/hr	**165.6** LB/hr **75.1** Kg/hr	**155.3** LB/hr **70.4** Kg/hr

PARTS LEGEND - LB 40-60 (CLEANER)

1.) Control Box
2.) ON/OFF Switch
3.) Manual Low-Water Reset (MLWR) (Optional)
4.) Dual Function Board w/ Enclosure
5.) Water Level Probes
6.) Water Inlet - 1/2" Y-Strainer
7.) 1/2" Water Solenoid
8.) 1/3 HP Pump & Motor
9.) 1/2" Check Valves
10.) 5/8" x 8" Sight Glass (Seismic Optional)
11.) Water Barrier - 1/2" U-Tube
12.) 0-90 PSI Pressure Controls
13.) Reset on "Safety" Pressure Switch
14.) 1/4" Needle Valve
15.) 0-160 PSI Pressure Gauge
16.) Steam Out - 1/4" Union (Male End)
17.) 1/2" Vacuum Relief Valve
18.) Safety Relief Valve
19.) Manual Drain - 1" Ball Valve
22.) 1 KVA Transformer
23.) 8" Caster Wheels
24.) Handle
25.) Solution Bucket

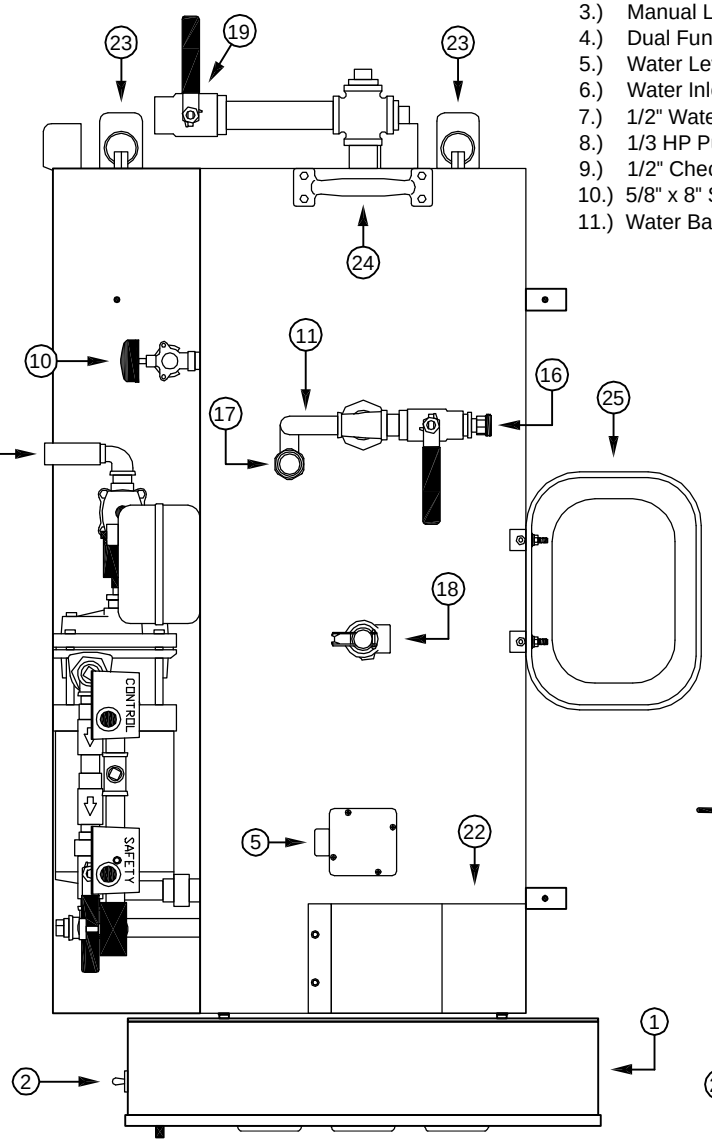

TOP VIEW

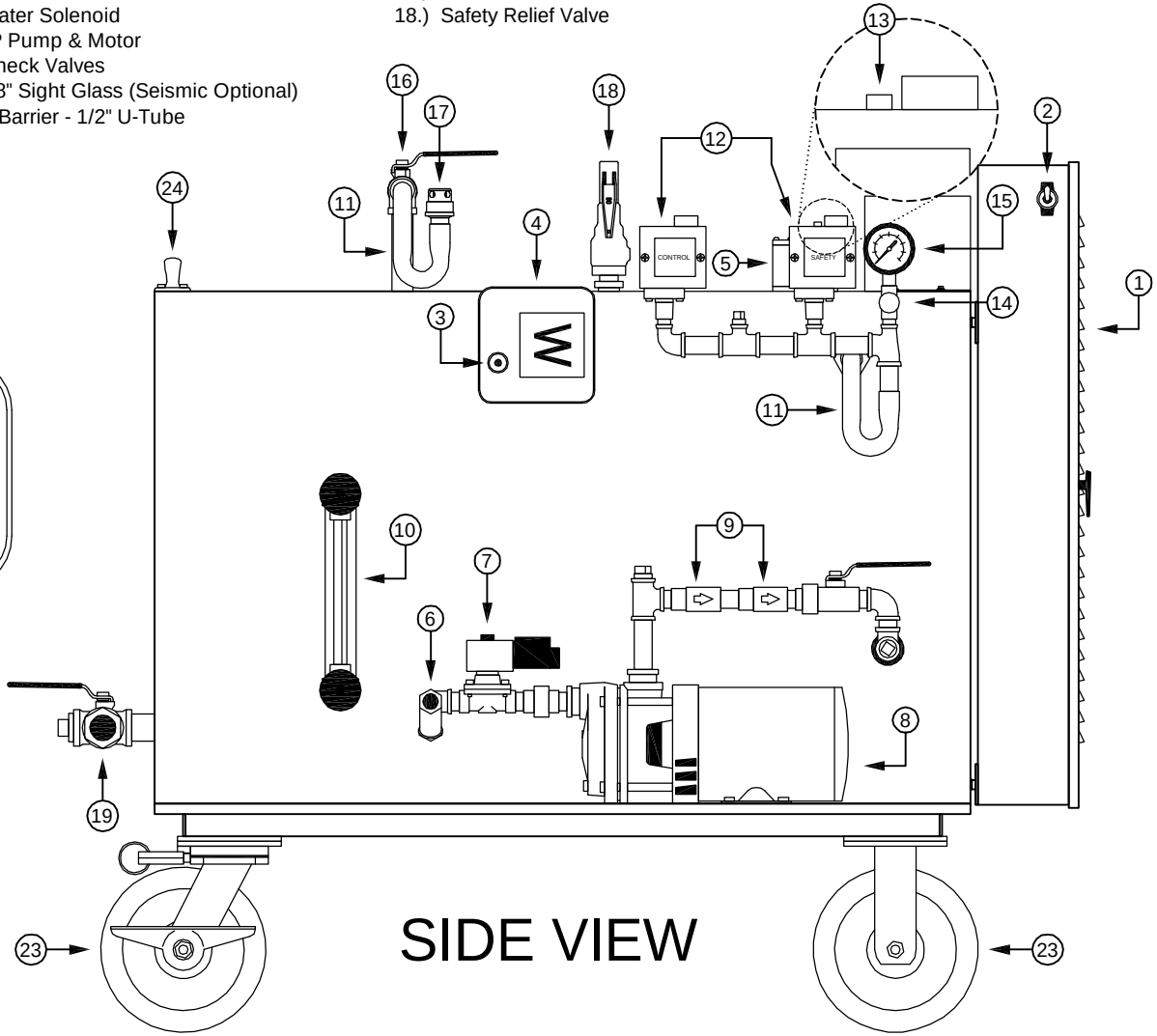

SIDE VIEW

This drawing and all information therein are the property of Electro-Steam Generator Corp. and shall not be disclosed, in whole or in part, to any third party without prior permission of Electro-Steam Generator Corp.

DRAWING TITLE: (PARTS LEGEND) LB 40-60 (C)(PORT)		MODEL UNIT: LB 40-60		ELECTRO-STEAM GENERATOR CORP.	
DECRIPTIONS:	DRAWN BY:	CHRISTOPHER FERRARA	01-05-10	50 Indel Ave. P.O. Rancocas, NJ 08073-0438	
HIGH PRESSURE	CHECKED:	CHRISTOPHER FERRARA	01-05-10		
CLEANER	ENGINEER:	-	-	DWG NO.: 311-040-060-000306	SCALE: N/A
PORTABLE	APPROVED:	SAL NEGRO	01-05-10		SHEET: 1 OF 1

PARTS LEGEND - HEAVY DUTY GUN (0014001)

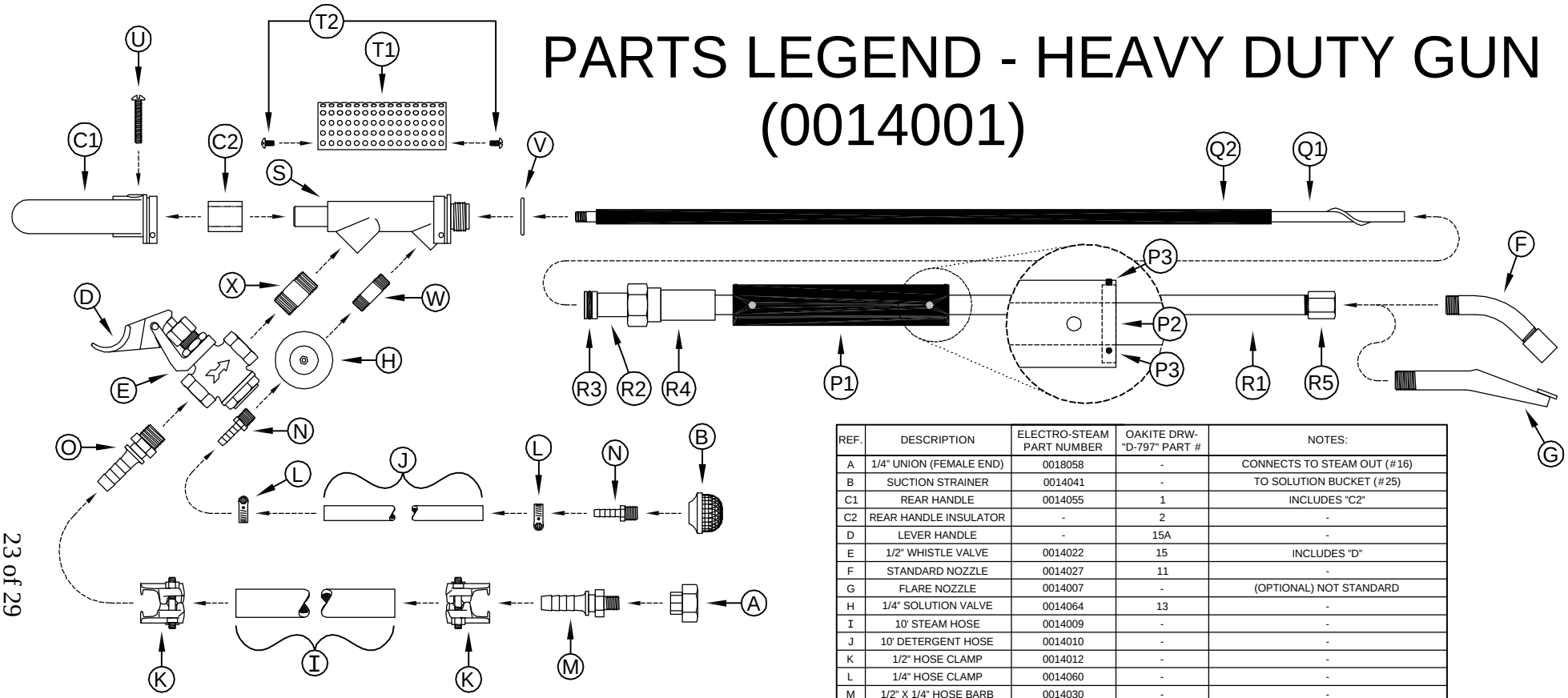

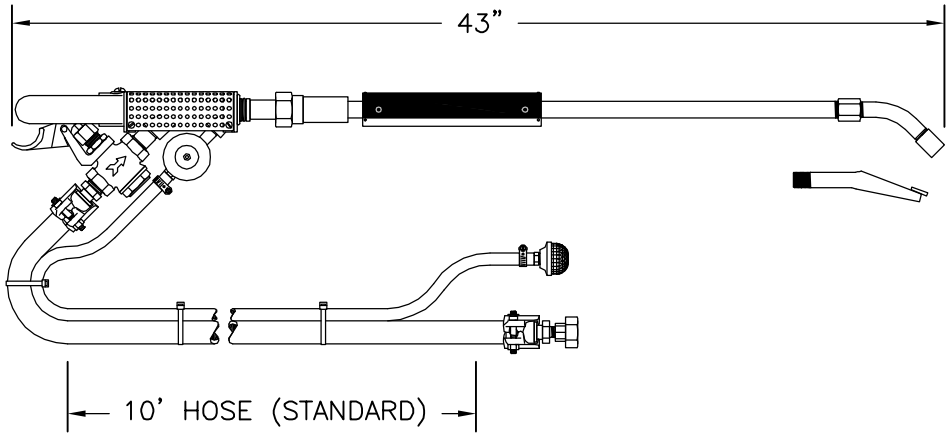

REF.	DESCRIPTION	ELECTRO-STEAM PART NUMBER	OAKITE DRW-"D-797" PART #	NOTES:
A	1/4" UNION (FEMALE END)	0018058	-	CONNECTS TO STEAM OUT (#16)
B	SUCTION STRAINER	0014041	-	TO SOLUTION BUCKET (#25)
C1	REAR HANDLE	0014055	1	INCLUDES "C2"
C2	REAR HANDLE INSULATOR	-	2	-
D	LEVER HANDLE	-	15A	-
E	1/2" WHISTLE VALVE	0014022	15	INCLUDES "D"
F	STANDARD NOZZLE	0014027	11	-
G	FLARE NOZZLE	0014007	-	(OPTIONAL) NOT STANDARD
H	1/4" SOLUTION VALVE	0014064	13	-
I	10' STEAM HOSE	0014009	-	-
J	10' DETERGENT HOSE	0014010	-	-
K	1/2" HOSE CLAMP	0014012	-	-
L	1/4" HOSE CLAMP	0014060	-	-
M	1/2" X 1/4" HOSE BARB	0014030	-	-
N	1/4" X 1/4" HOSE BARB	0014023	-	-
O	1/2" X 1/2" HOSE BARB	0014011	-	-
P1	GRIP	0014063	8	INCLUDES "P2 & P3"
P2	GRIP SPACER	-	7D	NOT SOLD SEPARATELY
P3	DRIVE SCREWS	-	18	-
Q1	INNER TUBE	0014036	9	INCLUDES "Q2"
Q2	INNER TUBE JACKET	-	10	-
R	OUTER TUBE ASSEMBLY	0014037	7	INCLUDES "P1, R1, R2, R3, R4, & R5
R1	OUTER TUBE	-	7A	NOT SOLD SEPARATELY
R2	TUBE SLEEVE	-	7B	NOT SOLD SEPARATELY
R3	RUBBER "O" RING	0013990	6	-
R4	TUBE NUT	-	7C	NOT SOLD SEPARATELY
R5	NOZZLE CONNECTOR	-	7E	NOT SOLD SEPARATELY
S	BASE CASTING	-	4	-
T1	PERFORATED SHIELD	-	3	-
T2	SHIELD SCREWS	-	19	-
U	HANDLE SCREW	-	17	-
V	COPPER GASKET	0014057	5	-
W	1/4" X 1 1/2" NIPPLE	0018001	12	-
X	1/2" X 1 1/2" NIPPLE	0018024	14	-

This drawing and all information therein are the property of Electro-Steam Generator Corp. and shall not be disclosed, in whole or in part, to any third party without prior permission of Electro-Steam Generator Corp.

DRAWING TITLE: PARTS LEGEND - HEAVY DUTY GUN		MODEL UNIT: -		ELECTRO-STEAM GENERATOR CORP.
DECRIPTIONS:	DRAWN BY:	CHRISTOPHER FERRARA	09-19-07	50 Indel Ave. P.O. Rancocas, NJ 08073-0438
-	CHECKED:	SAL NEGRO	09-20-07	
-	ENGINEER:	CHRISTOPHER FERRARA	09-19-07	DWG NO.: 0014001 SCALE: N/A
-	APPROVED:	JOHN PARDINI	09-20-07	SHEET: 1 OF 1

INSTALLATION DATA - LB 40-60 (C)(PORTABLE)

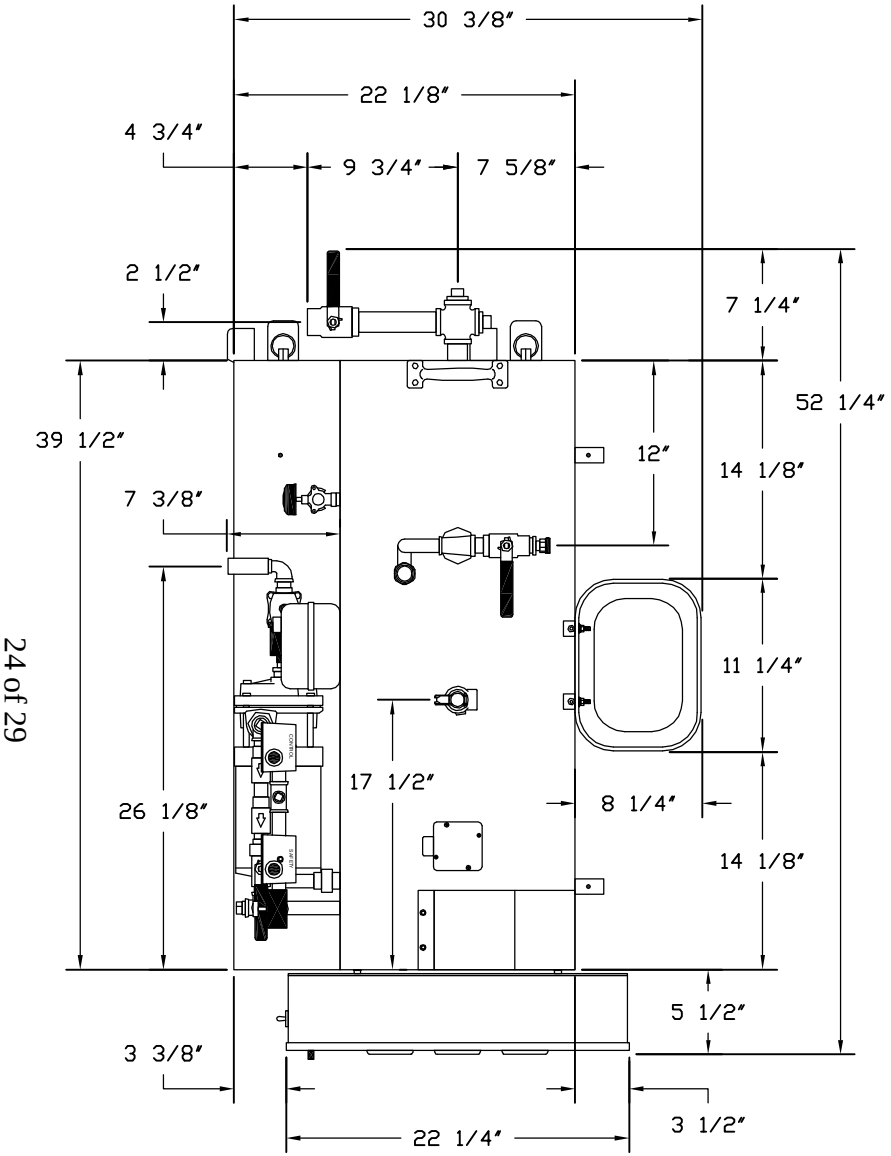

TOP VIEW

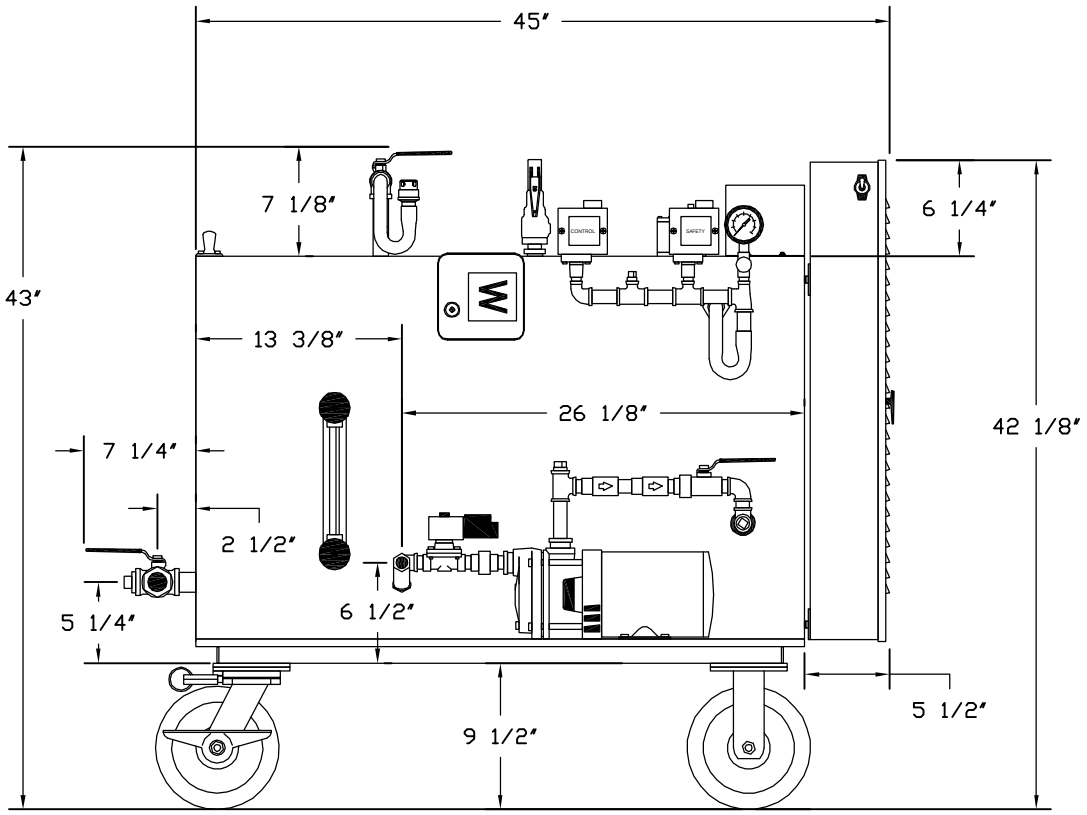

SIDE VIEW

This drawing and all information therein are the property of Electro-Steam Generator Corp. and shall not be disclosed, in whole or in part, to any third party without prior permission of Electro-Steam Generator Corp.

DRAWING TITLE: (INSTALLATION DATA) LB 40-60 (C)(PORT)		MODEL UNIT: LB 40-60		ELECTRO-STEAM GENERATOR CORP.	
DECRIPTIONS:	DRAWN BY:	CHRISTOPHER FERRARA	01-05-10	50 Indel Ave. P.O. Rancocas, NJ 08073-0438	
HIGH PRESSURE	CHECKED:	CHRISTOPHER FERRARA	01-05-10		
CLEANER	ENGINEER:	-	-	DWG NO.: 411-040-060-000306	SCALE: N/A
PORTABLE	APPROVED:	SAL NEGRO	01-05-10		SHEET: 1 OF 1

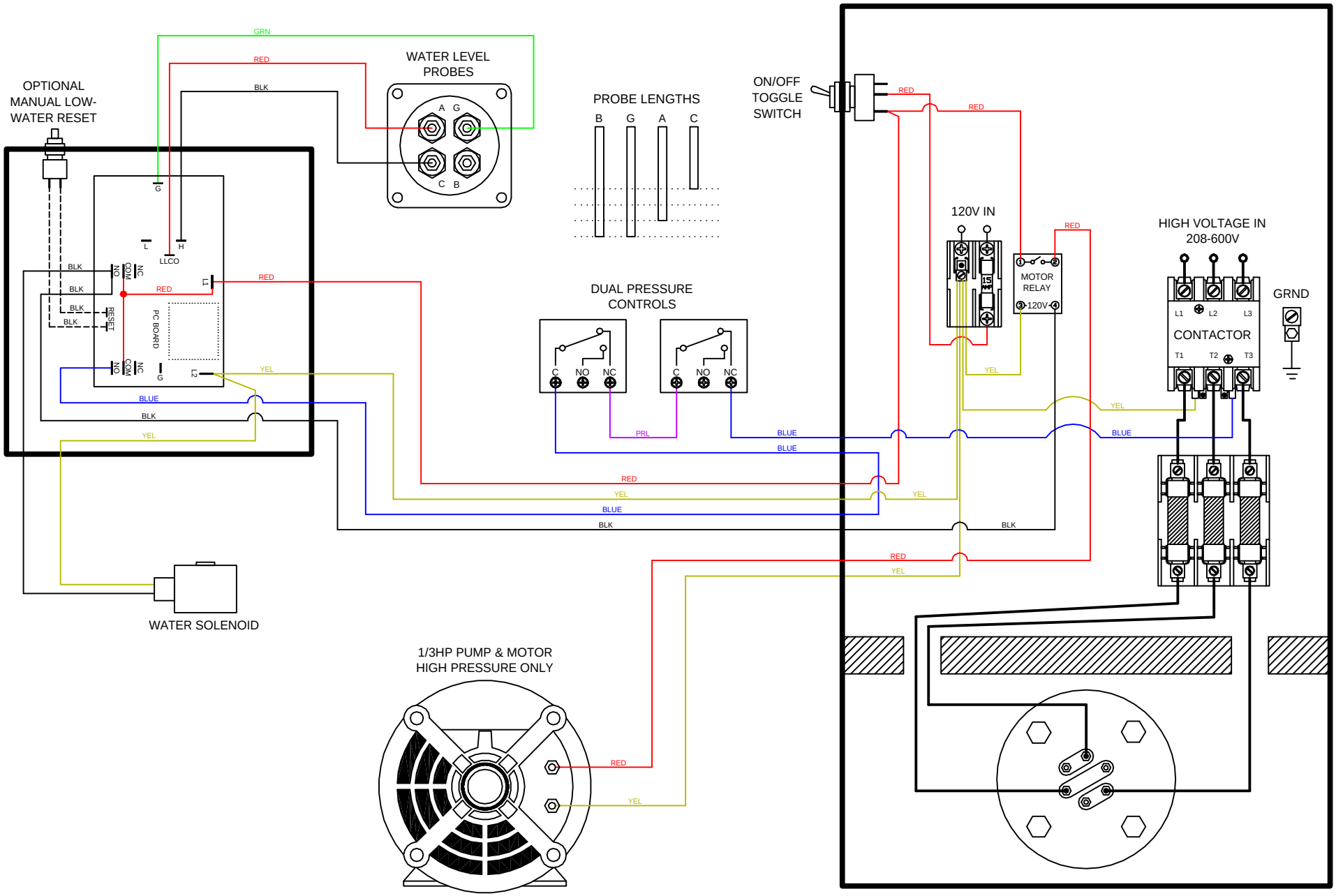

25 of 29

This drawing and all information therein are the property of Electro-Steam Generator Corp. and shall not be disclosed, in whole or in part, to any third party without prior permission of Electro-Steam Generator Corp.

DRAWING TITLE: LB (H)		MODEL UNIT: LB 10-240	ELECTRO-STEAM GENERATOR CORP. 50 Indel Ave. P.O. Rancocas, NJ 08073-0438
DECRIPTIONS:	DRAWN BY:	CHRISTOPHER FERRARA 12-30-09	
HIGH PRESSURE	CHECKED:	CHRISTOPHER FERRARA 12-30-09	
-	ENGINEER:	- -	DWG NO.: 111-010-240-111200 SCALE: N/A
-	APPROVED:	SAL NEGRO 12-30-09	SHEET: 1 OF 1

(3PH) 40-60KW (208-240V)

(1) 13064 - 200 AMP TERMINAL BLOCKS
(4) 13069 - 75AMP CONTACTORS
(4) 13056 - 60AMP 250V FUSE BLOCKS

(3PH) 40KW - (208-240V)
(12) 13013 - 40AMP 250V CLS-RK5 FUSES
(2) 10022 or 10023 - 20KW 208 or 230V HEATERS

(3PH) 50KW - (208-240V)
(12) 13044 - 50AMP 250V CLS-RK5 FUSES
(2) 10079 or 10025 - 25KW 208 or 230V HEATERS

(3PH) 60KW - (208-240V)
(12) 13046 - 60AMP 250V CLS-RK5 FUSES
(2) 10028 or 10029 - 30KW 208 or 230V HEATERS

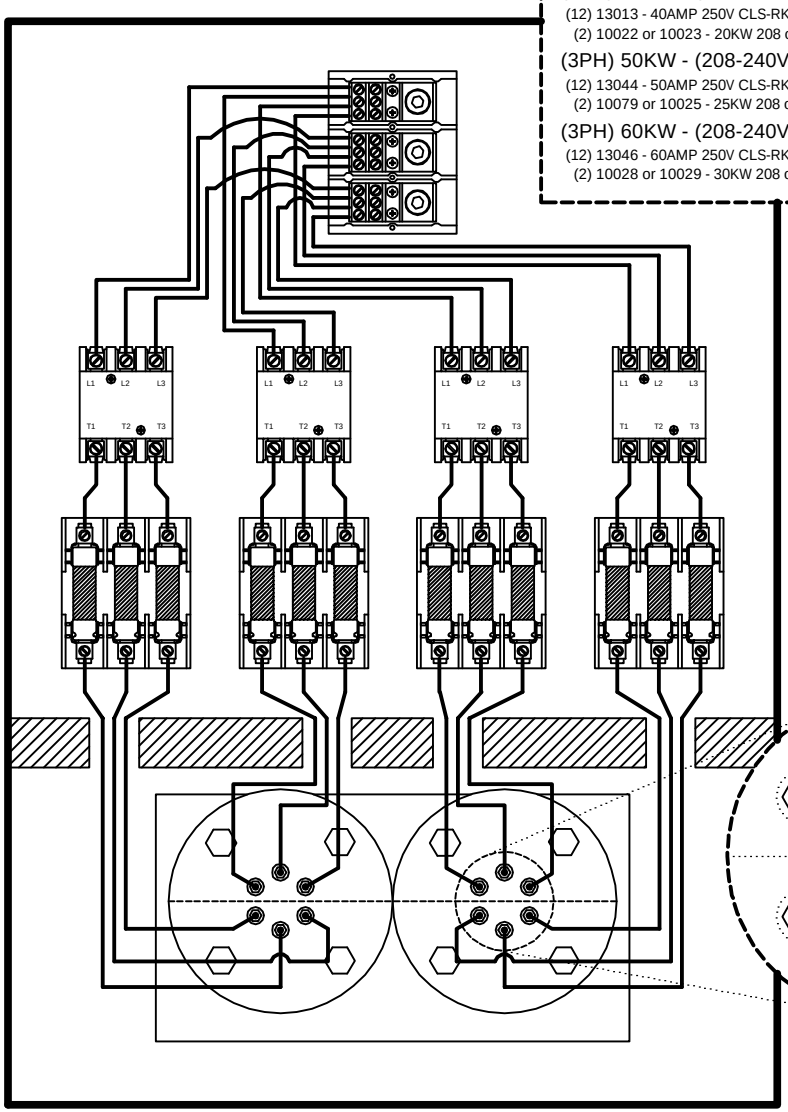

HEATER COILS MUST GO FROM TOP TO BOTTOM.

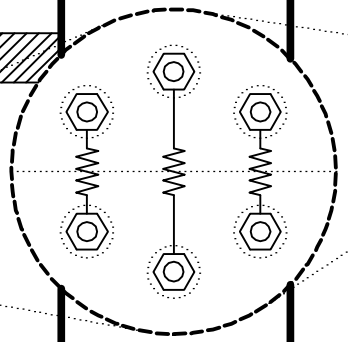

(3PH) 80KW - (208-240V)

(1) 13064 - 200 AMP TERMINAL BLOCK
(6) 26137 - 50AMP 3POLE CIRCUIT BREAKERS
(6) 13069 - 75AMP CONTACTORS
(3) 10079 or 10025 - 25KW 208 or 230V HEATERS

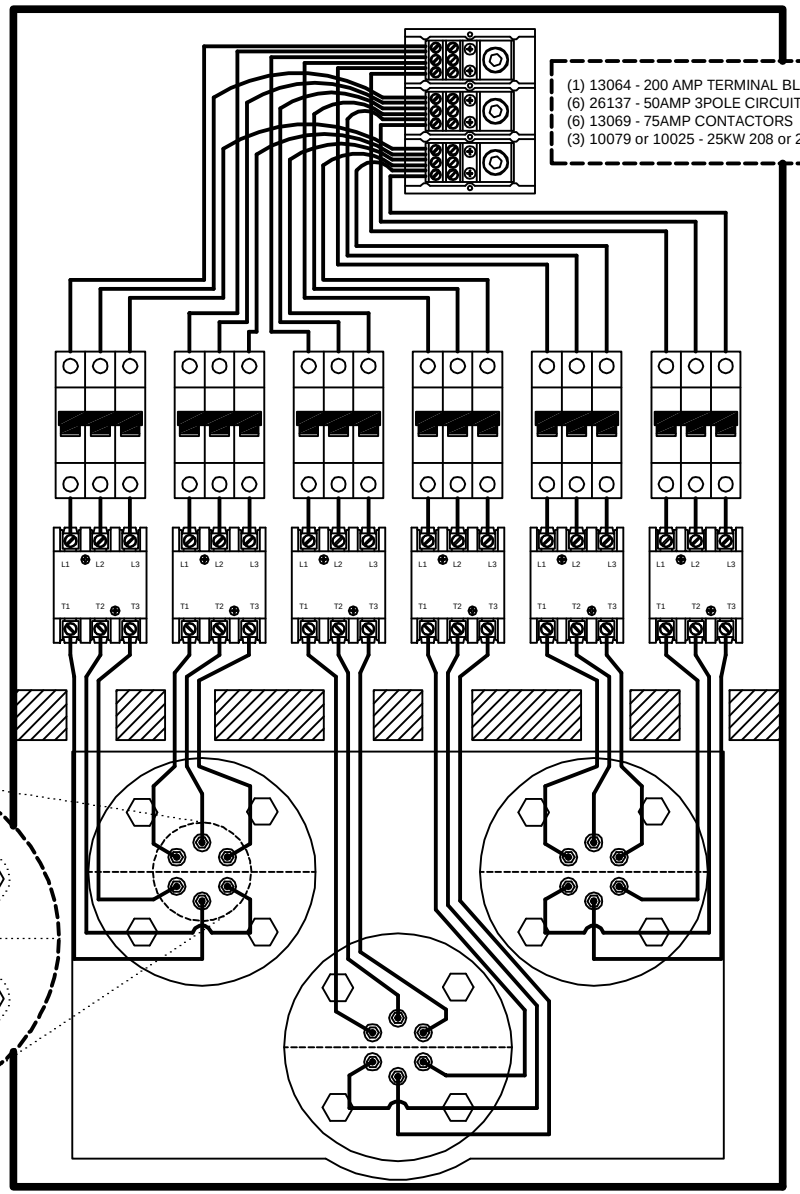

This drawing and all information therein are the property of Electro-Steam Generator Corp. and shall not be disclosed, in whole or in part, to any third party without prior permission of Electro-Steam Generator Corp.

DRAWING TITLE: (HEATERS) LB 40-60 (3PH)(208-240V)		MODEL UNIT: LB 40-60		ELECTRO-STEAM GENERATOR CORP.
DECRIPTIONS:	DRAWN BY:	CHRISTOPHER FERRARA	12-30-09	50 Indel Ave. P.O. Rancocas, NJ 08073-0438
THREE PHASE HEATER WIRING	CHECKED:	CHRISTOPHER FERRARA	12-30-09	
40-80KW 208-240V	ENGINEER:	-	-	DWG NO.: - SCALE: N/A
-	APPROVED:	SAL NEGRO	12-30-09	SHEET: 1 OF 1

(3PH) 40-50KW - (380-415V)

(3PH) 60KW - (380-415V)

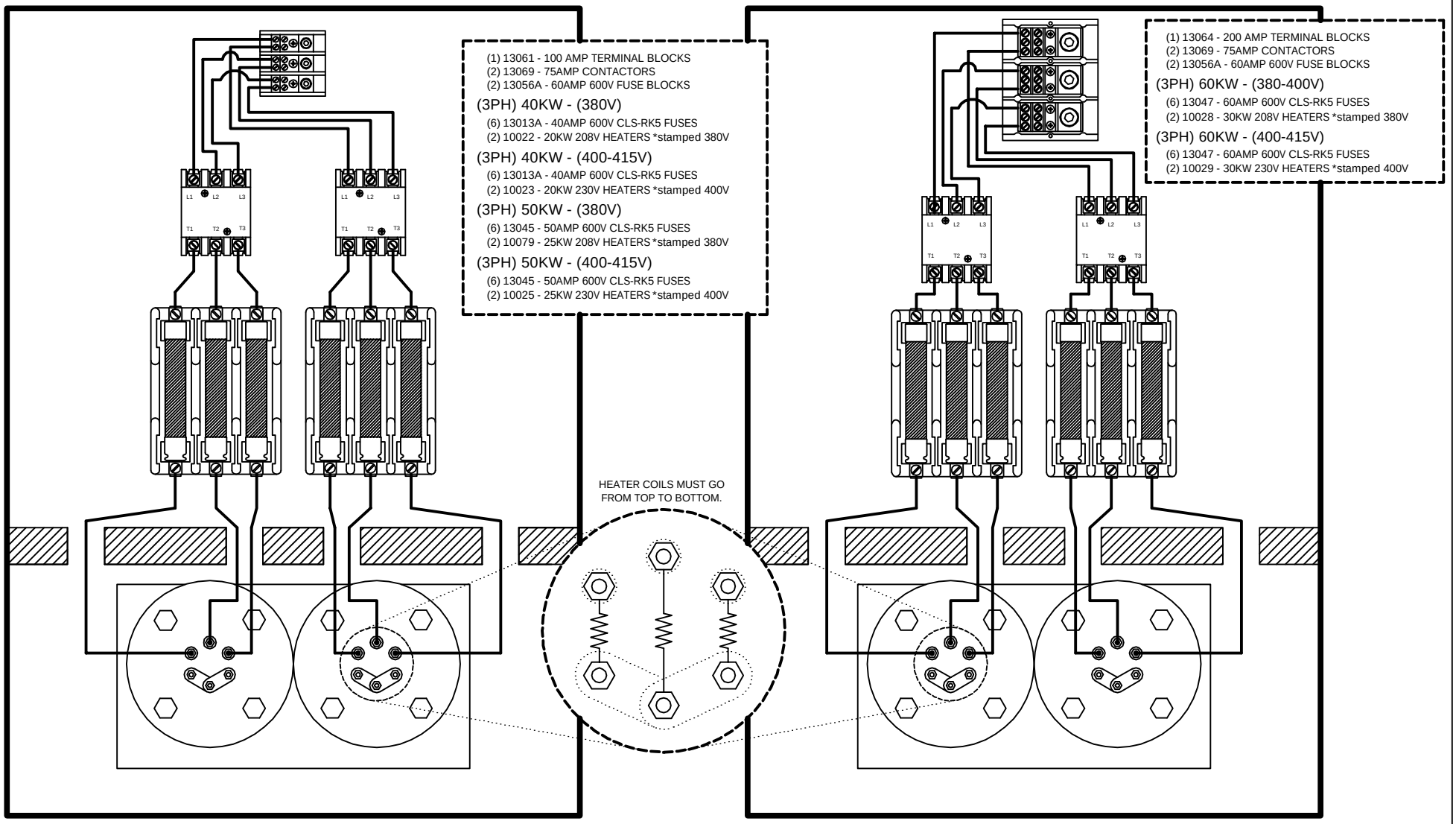

This drawing and all information therein are the property of Electro-Steam Generator Corp. and shall not be disclosed, in whole or in part, to any third party without prior permission of Electro-Steam Generator Corp.

DRAWING TITLE: (HEATERS) LB 40-60 (3PH)(380-415V)		MODEL UNIT: LB 40-60		ELECTRO-STEAM GENERATOR CORP.
DECRIPTIONS:	DRAWN BY:	CHRISTOPHER FERRARA	12-30-09	50 Indel Ave. P.O. Rancocas, NJ 08073-0438
THREE PHASE HEATER WIRING	CHECKED:	CHRISTOPHER FERRARA	12-30-09	
40-60KW 380-415V	ENGINEER:	-	-	DWG NO.: - SCALE: N/A
-	APPROVED:	SAL NEGRO	12-30-09	SHEET: 1 OF 1

(3PH) 40KW - (440-480V)
(3PH) 40-50KW - (550-600V)

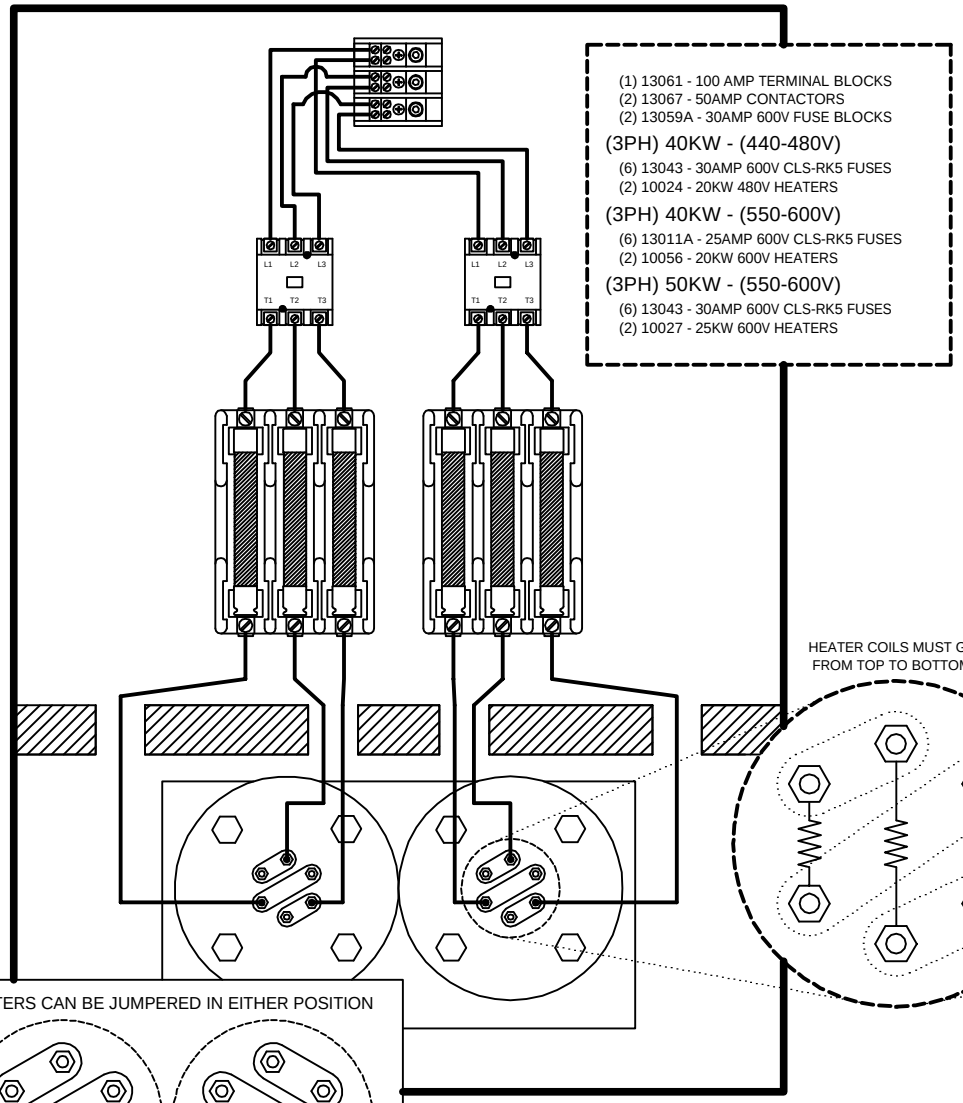

(3PH) 50-60KW - (440-480V)
(3PH) 60KW - (550-600V)

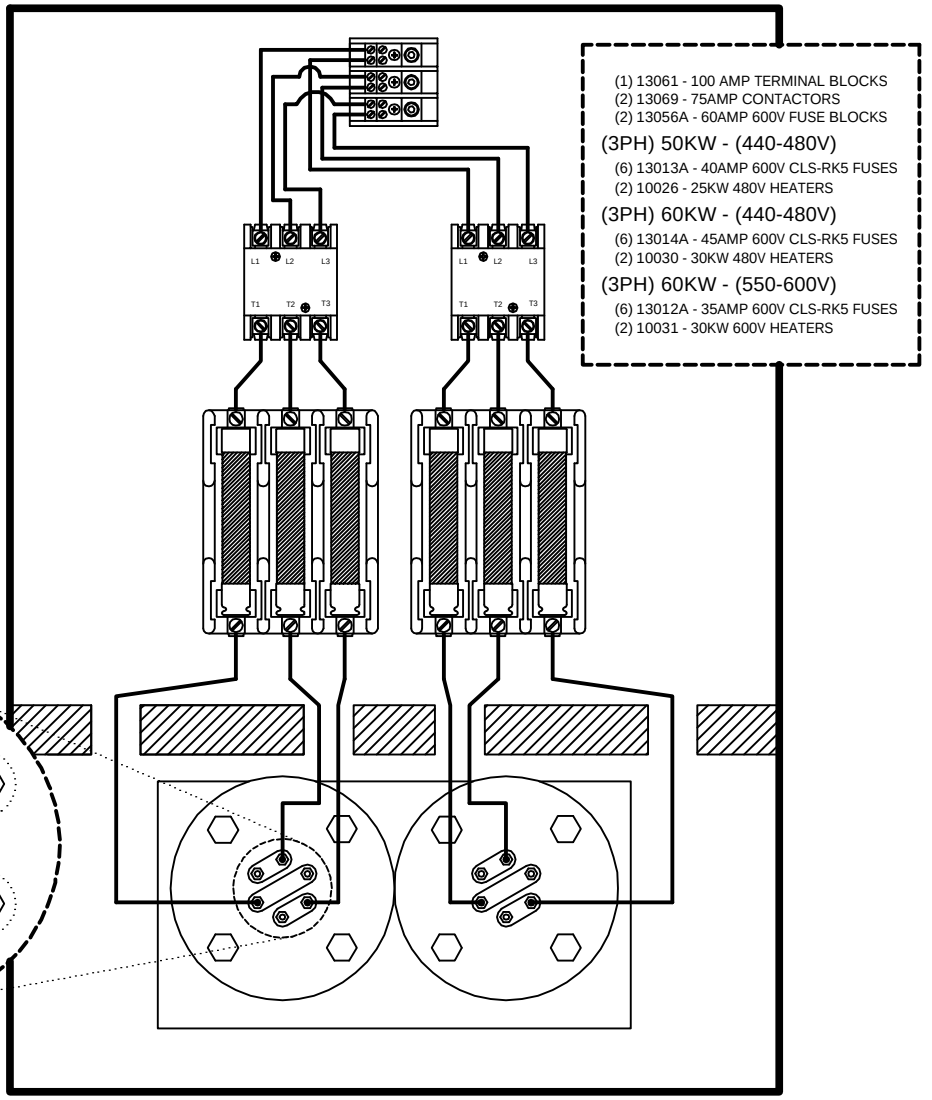

HEATER COILS MUST GO FROM TOP TO BOTTOM.

HEATERS CAN BE JUMPERED IN EITHER POSITION

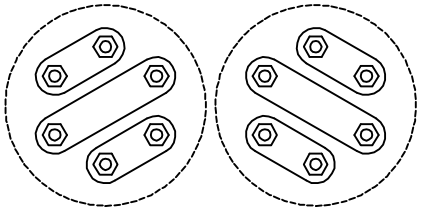

This drawing and all information therein are the property of Electro-Steam Generator Corp. and shall not be disclosed, in whole or in part, to any third party without prior permission of Electro-Steam Generator Corp.

DRAWING TITLE: (HEATERS) LB 40-60 (3PH)(440-600V)		MODEL UNIT: LB 40-60	
DECRIPTIONS:	DRAWN BY:	CHRISTOPHER FERRARA	12-30-09
THREE PHASE HEATER WIRING	CHECKED:	CHRISTOPHER FERRARA	12-30-09
40-60KW 440-600V	ENGINEER:	-	-
-	APPROVED:	SAL NEGRO	12-30-09

ELECTRO-STEAM GENERATOR CORP.
50 Indel Ave. P.O. Rancocas, NJ 08073-0438

DWG NO.: -
SCALE: N/A
SHEET: 1 OF 1

ELECTRO-STEAM GENERATOR CORPORATION TERMS AND CONDITIONS OF SALE

EXCLUSIVE AND ENTIRE: The following Standard Terms and Conditions are intended by the parties to govern all the purchases of equipment, parts or service from Seller, and together with the specifications provided or embodied herewith, represent the entire understanding of the parties without exception. All other terms and conditions are specifically rejected, and by proceeding with the transaction in any manner, both Seller and Buyer agree that these Standard Terms and Conditions shall control. The price charged by Seller is based on these Standard Terms and Conditions.

DOMESTIC TERMS

TERMS: Net 30 days. A "late payment" in the form of interest at the rate of 2% per month or a service charge of like amount will be levied on all late payments (the type of charge being consistent with the applicable local law). Invoices will be submitted when the equipment, part, service is supplied. Attention to these terms will eliminate delays in starting up any equipment or providing further service or parts. NOTE: Terms pending credit approval.

INTERNATIONAL TERMS

TERMS: Advanced payment (wire transfer, credit card, or cash in advance) or confirmed letter of credit.

TAXES: No taxes of any kind are included. All prices herein and/or contracts shall be subject to increase without notice by the amount of present or future sales or excise tax levied or charged, either by Federal, State or any other assessing agency.

CHANGES: Changes made after fabrication has begun shall be submitted in writing, signed by Buyer. Buyer agrees to pay the cost of any changes. The specifications and prices are subject to change without notice.

CLAIMS: Title passes to the Buyer upon delivery to the carrier, unless otherwise indicated. Safe delivery is the responsibility of the carrier. Damaged merchandise, if accepted, should be noted on the delivery receipt and on the freight bill before acceptance of shipment. Make claim promptly.

LOCAL CODES: All LB, LG, SV, SW, VB, and Eagle Series steam generators are built by an ASME Certificate holder in accordance with the ASME Boiler and Pressure Vessel Code Section I – Rules for Construction of Power Boilers (“ASME BPVC Section I”). They also comply with the requirements outlined in The National Board Synopsis of Boiler and Pressure Vessel Laws, Rules and Regulations (NB-370) RULES FOR CONSTRUCTION AND STAMPING section, which for many jurisdictions include but are not limited to ASME BPVC Section I, ASME CSD-1, ASME B31.1, and REGISTRATION WITH THE NATIONAL BOARD. NOTE: It is the responsibility of the installer to conform to any state or local codes. If further inspection following modifications by the installer is required under state and local codes, it is the responsibility of the local installer.

SEVERABLE AND INDEPENDENT PROVISION: WITHOUT LIMITING THE FOREGOING, IT IS EXPRESSLY UNDERSTOOD AND AGREED THAT EACH AND EVERY PROVISION OF THIS AGREEMENT THAT PROVIDES FOR A LIMITATION OF LIABILITY, DISCLAIMER OF WARRANTIES, OR EXCLUSION OF DAMAGES IS INTENDED BY THE PARTIES TO BE SEVERABLE AND INDEPENDENT OF ANY OTHER PROVISION AND TO BE ENFORCED AS SUCH, FURTHER, IT IS EXPRESSLY UNDERSTOOD AND AGREED THAT IN THE EVENT ANY REMEDY HEREUNDER IS DETERMINED TO HAVE FAILED ITS ESSENTIAL PURPOSE, ALL OTHER LIMITATIONS OF LIABILITY AND EXCLUSION OF DAMAGES SET FORTH HEREIN SHALL REMAIN IN FULL FORCE AND EFFECT. ALL SUCH PROVISIONS SHALL SURVIVE THE TERMINATION OF THIS AGREEMENT. NO ACTION, REGARDLESS OF FORM, ARISING OUT OF THE TRANSACTIONS OF THIS AGREEMENT MAY BE BROUGHT BY BUYERMORE THAN ONE YEAR AFTER THE CAUSE OF ACTION HAS ACCRUED.

WARRANTY: Seller warrants that the equipment, service, software, repair or parts supplied shall conform to the description. In the event that any part or parts, excepting expendable items such as, but not limited to, coil liners, thermocouples, refractories and other similar consumable items, that fail due to defects in material or workmanship within the first twelve (12) months of startup of equipment or eighteen (18) months after shipment, whichever occurs first, or in the case of service, repairs, or parts, within twelve (12) months of supplying such service, repair or part, Seller shall at its option, repair or replace EXW (Ex works), such defective part or parts. If the equipment, service, repair or part included software, Seller warrants, for a period of twelve (12) months of startup or eighteen (18) months after shipment, whichever occurs first, that the software supplied or serviced will meet its published functional specifications. Should software fail to meet the specifications, or be otherwise defective, Seller shall promptly correct errors or non-conformities. If correction is not possible, Seller shall replace defective software, or, at Seller=s option, refund the purchase price paid for such software. The warranty obligations of Seller with respect to equipment not manufactured by Seller shall conform to and be limited to the warranty actually extended to Seller by its suppliers. Notice of a claim for alleged defective equipment must be given within fifteen (15) days after Buyer learns of the defect. The defective part or parts shall be returned to Seller, freight prepaid, unless otherwise directed by Seller. This warranty shall be exclusive and in lieu of any other warranties and Seller makes no warranty of merchantability or warranties of any other kind express or implied, including any implied warranty of fitness for a particular purpose which extend beyond the warranty as set forth above. Seller=s liability for any and all losses and damages to Buyer resulting from defective parts of equipment shall in no event exceed the cost of repair or replacement, EXW of defective parts or equipment. IN NO EVENT SHALL SELLER BE LIABLE FOR INCIDENTAL, SPECIAL OR CONSEQUENTIAL DAMAGES OF ANY KIND OR NATURE WHATSOEVER.

PATENT INDEMNITY: Seller agrees to indemnify Buyer against any proven claim and assessed liability for infringement of any United States patent arising from the manufacture or sale of any apparatus furnished by Seller to Purchaser. THE FOREGOING STATES SELLER'S ENTIRE LIABILITY FOR CLAIMS OR PATENT INFRINGEMENT. Seller shall have no liability whatsoever if the claim of infringement arises out of Seller's compliance with Purchaser's specifications. Seller shall have no liability whatsoever if a claim of infringement is based upon the Purchaser's use of the equipment as part of a patented combination where the other elements of the combination are not supplied by Seller, or in the practice of a patented process. Where the specifications, process, design are supplied by Purchaser, then Buyer agrees to indemnify Seller in like manner.

PROPRIETARY RIGHTS: Unless otherwise stated herein all design, manufacturing processes, manufacturing information, vendor sources, know-how, equipment, tooling or other hardware, software, or information (collectively referred to as "resources") acquired or utilized by the Seller to produce the finished goods, and any intellectual property rights, including but not limited to patents, copyrights and trade secrets related in any way to the resources, are and shall hereinafter remain the exclusive property of the Seller, regardless of whether such resources are created solely by the Seller, or by Buyer's collaboration with the Seller, for example, where Seller utilizes Buyer's specifications to create resources, and the Buyer shall acquire or receive no rights or title therein or thereto as a result of this purchase whether or not the order provides for Seller's delivery of technical data, drawings or other information to the Buyer in addition to the finished goods. Unless Seller's prior written consent is given, in no event shall the Buyer permit such data, drawings or information to be: (1) disclosed to any third party other than the Buyer's customer; (2) used by the Buyer or the Buyer's customer for manufacture of like or similar goods; (3) used for purposes of duplicating or reverse-engineering Seller's proprietary designs or processes; or (4) used by a party other than the Buyer or the Buyer's customer for any purpose.

LIMITATION OF LIABILITY: SELLER'S TOTAL AGGREGATE LIABILITY (ARISING OUT OF OR IN CONNECTION WITH BUT NOT LIMITED TO ANY BREACH OF CONTRACT, NEGLIGENCE, TORT, LIQUIDATED DAMAGES, SPECIFIC PERFORMANCE, TERMINATION, CANCELLATION INCLUDING THE REPAYING OF THE CONTRACT PRICE OR PARTS THEREOF, FUNDAMENTAL BREACH, BREACH OF WARRANTIES, MISREPRESENTATION, NONPERFORMANCE, NONPAYMENT, OR ANY OTHER) WHETHER BASED IN CONTRACT, IN TORT, IN EQUITY, ON STATUE, AT LAW OR ON ANY OTHER THEORY OF LAW, SHALL NOT EXCEED THE PAID CONTRACT PRICE. THE BUYERACKNOWLEDGES THAT THE REMEDIES PROVIDED IN THIS CONTRACT ARE EXCLUSIVE AND IN LIEU OF ALL OTHER REMEDIES AVAILABLE TO THE BUYERAT LAW, IN CONTRACT, IN TORT, IN STATUTE OR IN EQUITY OR IN ANY OTHER THEORY OF LAWS.

INSURANCE: Buyer represents that they have a program of Insurance which adequately protects their interest, and that of their employees and agents, including damage to plant, property and equipment, personal injury of any kind, directly or indirectly related in any way to the equipment, service, repair or parts supplied by Seller. Accordingly, Buyer waives any claim against Seller for the foregoing, and on behalf of its Insurance Company, any right of subrogation in connection therewith.

U.S. EXPORT CONTROLS: All items furnished by Seller to Buyer in connection herewith shall at all times be subject to the export control laws and regulations of the U.S. including, but not limited to, 10 CFR Part 810 and U.S. Export Administration Regulations. Buyer agrees and give assurance that no items, equipment, materials, service, technical data, technology, software or other technical information or assistance furnished by Seller, or any good or product resulting therefrom, shall be exported or re-exported by Buyer or its authorized transferees, if any, directly or indirectly, unless in accordance with applicable U.S. export laws and regulations. The aforesaid obligations shall survive any satisfaction, expiration, termination or discharge of any other contract obligations.

FREIGHT TERMS: F.O.B. Factory. Unloading and transportation to job site are at the Buyers expense.

INSTALLATION: No installation or job supervision charges are included.

RETURN OF MATERIAL: No goods will be accepted for return without a return authorization number from the factory. A 25% restocking fee is charged on returns, freight prepaid.

FORCE MAJEURE: If the performance of any part of this contract by Seller is rendered commercially impracticable by reason of any strike, fire, flood, accident, or any other contingency, the non-occurrence of which was a basic assumption of this contract including war, embargo, government regulation, or any unforeseen shutdown of major supply sources or other like causes beyond the control of Seller such as cannot be circumvented by reasonable diligence and without unusual expense, Seller shall be excused from such performance in whole or in part to the extent that it is prevented and for as long a period of time as these conditions render Seller's performance commercially impractical.

LAW: This Agreement shall be governed by the internal laws of the State of New Jersey, USA, and any claims arising hereunder shall be prosecuted in the US District Court having jurisdiction of causes arising in the District in which Seller is located. CISG (the Convention for the International Sale of Goods) is expressly rejected.